Radiation Protection (Lead Sheet)

福 泉 工 程 有 限 公 司
FOOK TSUEN ENGINEERING LIMITED

Radiation Protection Serial

Lead Sheet

福泉工程有限公司
FOOK TSUEN ENGINEERING LIMITED

E-mail: info@fooktsuen.com Tel : +852 3998 3721 Fax : +852 3998 3723
Flat I, 12/F, Block 2, Kingswin Industrial Building, 32-40 Lei Muk Road, Kwai Chung, N.T.

Radiation Protection (Lead Sheet)

Our Company

The company founder was a labor in the construction industry, in the transitioning of form a labor to a business, the founder got into every single tiny detail of installation, production, materializing, manufacturing etc. However, the business vital is the simple and valuable business philosophy as:

- *Faith*
- *Delivering the needs of customer*
- *Win-win cooperation*
- *Sustainability*

Fook Tsuen Engineering Ltd was established since 2006, over the decade, we were anticipated much of public and private construction projects in Hong Kong. The radiation protection and hospital project are one of our signature business, and the main job reference is summarized as table in next page.

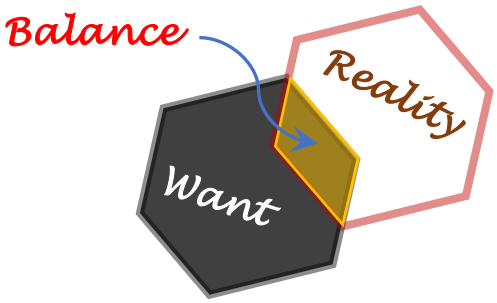

E-mail: info@fooktsuen.com Tel：3998-3721 Fax：3998-3723
Flat I, 12/F, Block 2, Kingswin Industrial Building, 32-40 Lei Muk Road, Kwai Chung, N.T.

Radiation Protection (Lead Sheet)

Hospital and Radiation Shielding Job Reference

Year	Organization	Project Description
2014	Canossa Hospital	X-ray room renovation
2015 - 2106	Tin Shui Wai Hospital	Radiation protection shielding
2016 - 2018	Hong Kong Children's Hospital (Kai Tak)	Radiation protection shielding with lead lined door
2018	Hong Kong Adventist Hospital	Operation Theatre Renovation with radiation shielding
2018 - 2019	Housing Authority (Shek Kip Mei Estate)	Dental Clinic – radiation shielding with lead lined door
2018 - 2020	CUHK Medical Centre	Radiation protection shielding with lead glass window
2019 - 2021	Museum Plus (M+)	Radiography room - Radiation protection shielding with lead lined door
2020-2021	Castle Peak Hospital Dental Clinic	X-ray room - radiation protection door
2022 - 2023	SPCA – Animal Welfare and Education Centre in Tsing Yi	Radiation protection shielding with lead lined door & lead glass window
2021 - 2023	Kwong Wah Hospital Redevelopment (Phase I)	Radiation protection shielding with lead lined door & lead glass window

福泉工程有限公司
FOOK TSUEN ENGINEERING LIMITED
E-mail: info@fooktsuen.com Tel：3998-3721 Fax：3998-3723
Flat I, 12/F, Block 2, Kingswin Industrial Building, 32-40 Lei Muk Road, Kwai Chung, N.T.

Radiation Protection (Lead Sheet)

Table of Content

E-mail: info@fooktsuen.com Tel：3998-3721 Fax：3998-3723
Flat I, 12/F, Block 2, Kingswin Industrial Building, 32-40 Lei Muk Road, Kwai Chung, N.T.

1. Lead Sheet Material Information

1.1 Manufacturer

Shanghai Shenwang Radiation Protective Equipment Co., Ltd. is the manufacturer of Lead Sheet, who are specialized in producing lead sheet, *lead glass, lead brick* and a series of radiation protective equipment and continuously providing high-quality service to customers more than 15 years.

Lead sheeting is unpierced sheet lead and is made of 99.99% pure virgin lead ingot, and free from dross, oxide. The lead sheet generally would provide variant size such as thickness of 1mm, 3mm, 5mm and etc.

1.2 International Standard

Comply to the international standards of IEC 6133-1, ISO 9001:2015, ISO 14001:2015, ISO 45001:2018, GBZ/T147-2002, GB/T 19001-2016, GB/T 24001/2016, GB/T 45001-2020.

The information of major international standard is showing in the Appendix 7 &8.

Note:
The IEC-1331-1 is replaced by IEC-61331-1 as shown.

IEC-1331-1 › Complete Document History
Protective Devices Against Diagnostic Medical X-Radiation - Part 1: Determination of Attenuation Properties of Materials.

How to Order
Standards We Provide
Updating, Reporting, Audits
Copyright Compliance

Obsolete Revision Information:

REPLACED BY IEC-61331-1 - WITHDRAWN IN 2014 - May 1, 2014
1ST EDITION - Part 1: Determination of Attenuation Properties of Materials - Oct. 1, 1994

Radiation Protection (Lead Sheet)

2. Appendix (Material Catalog)

福泉工程有限公司
FOOK TSUEN ENGINEERING LIMITED
E-mail: info@fooktsuen.com Tel：3998-3721 Fax：3998-3723
Flat I, 12/F, Block 2, Kingswin Industrial Building, 32-40 Lei Muk Road, Kwai Chung, N.T.

Radiation Protection (Lead Sheet)

神 网

X 射线辐射防护器材
专业生产商

X - ray radiation
protection equipment
Professional manufacturer

福泉工程有限公司
FOOK TSUEN ENGINEERING LIMITED

E-mail: info@fooktsuen.com Tel：3998-3721 Fax：3998-3723
Flat I, 12/F, Block 2, Kingswin Industrial Building, 32-40 Lei Muk Road, Kwai Chung, N.T.

Radiation Protection (Lead Sheet)

Company Introduction

公司简介
Company Introduction

我公司是 X 射线辐射防护器材的专业生产企业，多年来在工业探伤、医用 X 射线辐射防护领域中，热忱为用户提供优质产品和一流的服务。长期以来，在卫生部射线防护器材质量监测中心支持和指导下，不断开发新产品，以全国最大的加工高铅玻璃规格领先于国际市场。产品从单一的光学高铅玻璃发展成辐射防护系列器材。

在过去的几年中，产品畅销全国和出口东南亚等国，深受用户的好评和信赖。我公司全体员工将用全部的努力确保您的利益得到最高的尊重，因为您的满意与健康是我们的永远追求，真诚欢迎您来沪光临我公司参观考察指导或来电洽谈。谢谢合作！

For more than 15 years, Shanghai Shenwang has applied our unparalleled expertise in radiation protective products. We are specialized in producing lead glass, lead aprons, lead goggles, lead sheets and a series of radiation protective equipment and continuously providing high-quality service to our customers.

We succeed through sustained investment in R&D, a unique combination of material and process innovation and close collaboration with customers to solve tough technology challenges.

福泉工程有限公司
FOOK TSUEN ENGINEERING LIMITED
E-mail: info@fooktsuen.com Tel：3998-3721 Fax：3998-3723
Flat I, 12/F, Block 2, Kingswin Industrial Building, 32-40 Lei Muk Road, Kwai Chung, N.T.

Radiation Protection (Lead Sheet)

Others

其他防护产品
Others

防辐射铅板
Lead Sheet

铅板是采用 99.99% 的纯铅压铸，屏蔽性能强，可用于各种场合的屏蔽。

Made of 99.99% lead casting.
Strong Shielding and various size.

防辐射涂料
Protective Coating

射线辐射防护涂料广泛应用于医疗、工业探伤、核电站等场所的屏蔽防护，对 X、Y 射线有良好的吸收作用，可以代替惯用的铅板防护且施工方便，粘结牢固等优点。

The coatings of anti-radiation are widely used for shielding protection in the field of medical, industrial flaw inspection, nuclear power plants, etc. with good absorption of X-ray and Gamma ray, and the conventional lead plates can be replaced by the coatings which have an advantage of easy construction and solid bond, etc.

防辐射眼镜 / 铅眼镜片
Lead Goggles

防辐射眼镜分为普通型和豪华型
铅当量分为 0.5mmPb 和 0.75mmPb。

Lead equivalent: 0.5mmpb / 0.75mmpb

福泉工程有限公司
FOOK TSUEN ENGINEERING LIMITED
E-mail: info@fooktsuen.com Tel：3998-3721 Fax：3998-3723
Flat I, 12/F, Block 2, Kingswin Industrial Building, 32-40 Lei Muk Road, Kwai Chung, N.T.

Radiation Protection (Lead Sheet)

包装方式
Package Methods




上海神网辐射防护器材有限公司
Shanghai Shenwang Radiation Protective Equipment Co.,Ltd.

地址 上海市闵行区华漕镇纪翟路1510弄149号(电台路)
电话：021-62966185
传真：021-62966186
邮箱：jasmine.hou@swshenwang.com

Address: No.149, lane 1510, Jidi Road, Huacao Town, Minhang District, Shanghai
Tel: 021-62966185 Fax: 62966186
E-mail: jasmine.hou@swshenwang.com

www.swshenwang.com

Radiation Protection (Lead Sheet)

3. Appendix (Job Reference)

福泉工程有限公司
FOOK TSUEN ENGINEERING LIMITED
E-mail: info@fooktsuen.com Tel：3998-3721 Fax：3998-3723
Flat I, 12/F, Block 2, Kingswin Industrial Building, 32-40 Lei Muk Road, Kwai Chung, N.T.

Radiation Protection (Lead Sheet)

Hong Kong Main Job Reference	
1	Kwong Wah Hospital Redevelopment Phase 1
2	SPCA (Animal Welfare Centre – Tsing Yi)
3	Hong Kong Children Hospital (Kai Tak)

上海神网辐射防护器材有限公司
Shanghai Radiation Protective Equipment Co., Ltd.

Job Reference	
医院名称	工程项目名称
上海阳光康复中心	拍片机房
香港儿童医院	拍片机房
虹口区精神卫生中心	X 线机房
昆山市第四人民医院	X 线机房
上海市浦东新区疾病预防控制中心	透视机房
南京 94654 部队医院	透视，拍片机房
上海奉贤区海湾医院	透视，拍片机房
浙江省杭州消防医院	拍片机房
浙江省杭州拱墅区医院	拍片机房
上海光华医院	拍片机房
上海静安区疾控中心	透视机房
江苏海宁瑞金医院	拍片机房
闵行区精神卫生中心	X 线机房
上海复旦大学附属儿科医院	CT，DR，ECT 机房，拍片机
上海静安区闸北中心医院	DR、CT、钼靶机房、口腔 CT
上海江川医院	透视，拍片机房
上海奉贤中心医院	CT，DR 机房
上海新华医院	CT，DR，震波机房
医院名称	工程项目名称
公安部第三研究所	辐射防护检测机房
长征医院	CT，DR，拍片，胃肠机房
虹口区精神卫生中心	DR 机房
徐汇区妇幼保健院	X 光拍片机房
昆山虹桥医院	X 光拍片机房
黄浦区中西医结合医院	DR 机房
上海市中山医院放射科	拍片机房，不锈钢电动移门

福泉工程有限公司 FOOK TSUEN ENGINEERING LIMITED
E-mail: info@fooktsuen.com Tel：3998-3721 Fax：3998-3723
Flat I, 12/F, Block 2, Kingswin Industrial Building, 32-40 Lei Muk Road, Kwai Chung, N.T.

Radiation Protection (Lead Sheet)

上海神网辐射防护器材有限公司
Shanghai Radiation Protective Equipment Co., Ltd.

上海华东医院	拍片机房
上海东方医院	拍片机房
上海曙光医院	拍片机房
江苏泰州出入境检验检疫局	透视机房
上海市静安区中心医院	拍片机房
上海市第六人民医院	CT，DR 机房
上海第二军医大学附属长海医院	CT，DR 机房
上海市闵行区中心医院	拍片机房
上海市医科大学附属金山医院	拍片机房
上海奉贤海湾精神卫生中心	拍片机房
上海儿童医学中心	CT、胃肠机房
上海圣欣儿科门诊部	DR 机房

福泉工程有限公司 FOOK TSUEN ENGINEERING LIMITED
E-mail: info@fooktsuen.com Tel：3998-3721 Fax：3998-3723
Flat I, 12/F, Block 2, Kingswin Industrial Building, 32-40 Lei Muk Road, Kwai Chung, N.T.

Radiation Protection (Lead Sheet)

4. Laboratory Test Report (Hong Kong)

Radiation Protection (Lead Sheet)

東業德勤測試顧問有限公司
ETS-TESTCONSULT LTD.™

8/F Block B,
Verlestrong Industrial Centre,
34-36 Au Pui Wan Street,
Fo Tan, Hong Kong
T: +852 2695 8318
F: +852 2695 3944
E: etl@ets-testconsult.com
W: www.ets-testconsult.com

TEST REPORT

Chemical Analysis

Report No : AMA10476
Page No. : 1 of 1

Information provided by customer

Customer Name : MGI (Far East) Limited
Customer Address : Unit 16-17, 11/F, Goldfield Industrial Centre, 1 Sui Wo Road, Fo Tan, N T
Project Name : Lead Content Analysis of Lead Sheet
Sample Description : Lead Sheets (1mm and 3mm)
Supplier Name : Shanghai Shenwang Radiation Protective Equipment Co., Ltd.
上海神網輻射防護器材有限公司

Laboratory information

Receive Date : 17 March 2021
Report Date : 01 April 2021
Test Date : 25 to 30 March 2021

Results

Lab Ref. No.	Customer Sample ID	Element(s)	Test Method(s)	Result (s)
CL/1/M233/01	1 mm	Lead (Pb)	In-house method, ICP-OES	99.99%
CL/1/M233/02	3 mm			99.98%

Remark (if any) :
1. The results relate only to the tested sample as received.
2. Unless otherwise specified, the test was carried out at the company address showed in the report.

Approved Signatory
KONG, Ping Ki Guy

- END OF REPORT -

福泉工程有限公司
FOOK TSUEN ENGINEERING LIMITED

Radiation Protection (Lead Sheet)

ORIGINAL

香港試驗有限公司

HONG KONG TESTING CO., LTD.

LABORATORY TEST REPORT

Report Serial No. : M036021R00270

Customer : MGI (FAR EAST) LTD.
Unit 16-17, 11/F.,
Goldfield Industrial Centre,
1 Sui Wo Road,
Fotan, N.T., Hong Kong

Project/Source : -

Sample : Lead Plate

Date Received : 7 April 2021
Date Test Completed : 7 April 2021

Date of Issue : 14 April 2021

Remark : This job was subletted to
Promet Metals Testing Laboratory Limited

Signed :

For and on behalf of
HONG KONG TESTING COMPANY LIMITED

TSUI Pui-yuen
Asst. Lab. Manager

Rm.205, 2/F., Fuk Shing Comm. Bldg., 28 On Lok Mun St.,
On Lok Tsuen, Fanling, N.T. Hong Kong.
香港新界粉嶺安樂村安樂門街28號福成商業大廈二樓205室

Tel : (852) 2692 2171
Fax : (852) 2691 4874
Email: testhk@netvigator.com

Radiation Protection (Lead Sheet)

Promet
Metals Testing Laboratory Limited
利保金屬檢測有限公司
香港新界大埔工業邨大發街16號 16 Dai Fat Street, Tai Po Industrial Estate, N.T., HK
www.prometlab.com : +852 3965 0870 : +852 3965 0591 : info@prometlab.com

TEST REPORT

Report No.	RPA94D2689
Lab Sample ID.	S210515-01
Received Date	2021/04/07
Test Period	2021/04/07

Customer Information (Provided by Customer)

Name of Client	MGI (Far East) Ltd.
Client Address	---
Sample(s) Description	Metal sample(s) said to be Pure Lead Plate
Supplier	Shanghai Shenwang Radiation Protective Equipment Co., Ltd

Test Information

Test Item		Test Method
Ag	Silver	In-house method Spark-OES
Cu	Copper	
Bi	Bismuth	
As	Arsenic	
Sb	Antimony	
Sn	Tin	
Zn	Zinc	
Fe	Iron	
Pb	Lead	

Note :
1. Submitted sample(s) tested as received.
2. Test results relate only to the samples tested.
3. Terms & Conditions of Services can be obtained online or from our Customer Service.

Test Results
Please refer to next page(s).

Approved Signatory : NG Kwok Hei, Kenneth (Assistant Laboratory Manager)

Issue Date : 2021-04-07

Page 1 of 2

F0023_03

Radiation Protection (Lead Sheet)

Promet
Metals Testing Laboratory Limited
利保金屬檢測有限公司
香港新界大埔工業邨大發街16號 16 Dai Fat Street, Tai Po Industrial Estate, N.T., HK
www.prometlab.com : +852 3965 0870 : +852 3965 0591 : info@prometlab.com

TEST REPORT

Report No.	RPA94D2689
Name of Client	MGI (Far East) Ltd.
Lab Sample ID.	S210515-01

Test Results

Lab Sample ID	Customer Reference	Result(s) %								
		Ag	Cu	Bi	As	Sb	Sn	Zn	Fe	Pb
S210515-01	Pure Lead Plate	<0.0005	<0.0005	<0.0005	<0.0005	0.0005	0.0012	0.0014	<0.0005	99.997

Note: 1. < Less than
2. The remainder of above sample is lead based on the calculation of 100 minus the sum of other elements.

Sample Photo (s)

Sample ID: S210515-01

- End of Report -

F0023_03

福泉工程有限公司 FOOK TSUEN ENGINEERING LIMITED
E-mail: info@fooktsuen.com Tel：3998-3721 Fax：3998-3723
Flat I, 12/F, Block 2, Kingswin Industrial Building, 32-40 Lei Muk Road, Kwai Chung, N.T.

Radiation Protection (Lead Sheet)

5. Appendix (Certification)

福泉工程有限公司
FOOK TSUEN ENGINEERING LIMITED
E-mail: info@fooktsuen.com Tel：3998-3721 Fax：3998-3723
Flat I, 12/F, Block 2, Kingswin Industrial Building, 32-40 Lei Muk Road, Kwai Chung, N.T.

Radiation Protection (Lead Sheet)

QUALITY MANAGEMENT SYSTEM CERTIFICATE

Registration No. 0350120Q31042R0S

This is to certify that the quality management system of

Shanghai Shenwang Radiation Protective Equipment Co., Ltd.

Nanmei Lane, Weixing Village, Huacao Town, Minhang District, 201107

Social Credit Code: 913101127472906754

is in conformity with

GB/T 19001-2016 / ISO 9001:2015 Standard

This certificate is valid to the following product(s)

Manufacture and service of lead glass products (Site Covered: No. 18, Zexin Avenue, Xingou Town, Funing County, Yancheng City, Jiangsu Province/Room B, 2/F, Building 4, Lane 88, Minbei Road, Minhang District, Shanghai).

Date of issue: November 13, 2020
Date of expiry at most: November 12, 2023

Representative: *WangHonglin*

XINGYUAN CERTIFICATION CENTRE CO., LTD. (XQCC)
(7FL, Tower C, Jiahua Plaza, No. 9 Shangdi 3 St., Haidian, Beijing)

中国认可
国际互认
管理体系
MANAGEMENT SYSTEM
CNAS C035-M

NOTE: This certificate shall be maintained by regular surveillance audit.
The validity of the certificate can be verified by scanning QR code.
The information of the certificate can be available in http://www.cnca.gov.cn, the website of CNCA, and in our website http://www.xqcc.com.cn.

Radiation Protection (Lead Sheet)

ENVIRONMENTAL MANAGEMENT SYSTEM CERTIFICATE

Registration No. 0350120E20626R0S

This is to certify that the environmental management system of

Shanghai Shenwang Radiation Protective Equipment Co., Ltd.

Nanmei Lane, Weixing Village, Huacao Town, Minhang District, 201107

Social Credit Code: 913101127472906754

is in conformity with

GB/T 24001-2016 / ISO 14001:2015 Standard

This certificate is valid to

Manufacture and service of lead glass products (Site Covered: No. 18, Zexin Avenue, Xingou Town, Funing County, Yancheng City, Jiangsu Province/Room B, 2/F, Building 4, Lane 88, Minbei Road, Minhang District, Shanghai).

Date of issue: November 13, 2020
Date of expiry at most: November 12, 2023

Representative: *WangHonglin*

XINGYUAN CERTIFICATION CENTRE CO., LTD. (XQCC)
(7FL, Tower C, Jiahua Plaza, No. 9 Shangdi 3 St., Haidian, Beijing)

中国认可
国际互认
管理体系
MANAGEMENT SYSTEM
CNAS C035-M

NOTE: This certificate shall be maintained by regular surveillance audit.
The validity of the certificate can be verified by scanning QR code.
The information of the certificate can be available in http://www.cnca.gov.cn, the website of CNCA, and in our website http://www.xqcc.com.cn.

Radiation Protection (Lead Sheet)

OCCUPATIONAL HEALTH AND SAFETY MANAGEMENT SYSTEM CERTIFICATE

Registration No. 0350120S30602R0S

This is to certify that the occupational health and safety management system of

Shanghai Shenwang Radiation Protective Equipment Co., Ltd.

Nanmei Lane, Weixing Village, Huacao Town, Minhang District, 201107

Social Credit Code: 913101127472906754

is in conformity with

GB/T 45001-2020 / ISO 45001:2018 Standard

This certificate is valid to

Manufacture and service of lead glass products (Site Covered: No. 18, Zexin Avenue, Xingou Town, Funing County, Yancheng City, Jiangsu Province/Room B, 2/F, Building 4, Lane 88, Minbei Road, Minhang District, Shanghai).

Date of issue: November 13, 2020
Date of expiry at most: November 12, 2023

Representative: WangHonglin

XINGYUAN CERTIFICATION CENTRE CO., LTD. (XQCC)
(7FL, Tower C, Chinaunicom Plaza, No. 9 Shangdi 3 St., Haidian, Beijing)

CNAS
中国认可
管理体系
MANAGEMENT SYSTEM
CNAS C035-M

NOTE: This certificate shall be maintained by regular surveillance audit.
The validity of the certificate can be verified by scanning QR code.
The information of the certificate can be available in http://www.cnca.gov.cn, the website of CNCA, and in our website http://www.xqcc.com.cn.

Radiation Protection (Lead Sheet)

云南驰宏锌锗股份有限公司

Yunnan Chihong Zinc & Germanium Co.,Ltd

铅锭质量证明书

Lead Ingot Certificate Of Quality

编号: 文件编号:

NO: 2020773 Certificate No: CHQJJL 214

注册商标 Registered Trademark	驰宏锌锗牌 CHIHONG Zn&Ge	执行标准 Chinese Standard	GB/T469-2013
牌号 Code No.	Pb99.994	LME牌号 LME Sword Code	YQ99.994
发货批号 Delivery No.	Pb20-05-YQ20		
件数（锭） Ingots	675	净重（吨） Net Weight(NT)	32.5739
生产日期/批 Date of manufacture/Batch	净重（吨） Net Weight(NT)	捆数 Bundle Weight	件数（锭） Ingots
20-04-27-285	32.5739	27	675

化学成分（%） Chemical Composition

生产批	Pb	杂质成分 不大于 Impurity no more than										
Batch No	(%)	Ag	As	Bi	Cu	Sb	Sn	Zn	Fe	Cd	Ni	总和 (Total)
20-04-27-285	99.9979	0.0002	0.0002	0.0002	0.0002	0.0003	0.0002	0.0002	0.0002	0.0002	0.0002	0.0021

外观质量	合格	尺寸	长	615±10	宽	120±10	厚	80±10
Presentation Quality	Qualified	Size	Length	615±10	Width	120±10	Thick	80±10

检验: 曾红梅 审核: 余孝琪 批准: 陈吉祥

Inspector: Checker: Approver:

产地: 中国·云南·曲靖

Place of origin: China · Yunnan · Qujing

厂址: 云南省曲靖经济技术开发区

Add: The Economic & Technological Development Zone,Qujing City, Yunnan Province, P.R.China

主页(Home Page): http://www.chxz.com 电子信箱(Email): chyxc@chxz.com

邮编(Zip code): 655000 电话(Tel): 0874-8966715 8966716 传真(Fax): 0874-8966718

Radiation Protection (Lead Sheet)

CMA 160018102093

中国疾病预防控制中心
辐射防护与核安全医学所

检 测 报 告

辐安检字 2019-031 号

样品名称：铅板

委托单位：上海神网辐射防护器材有限公司

检测类型：委 托 检 测

发出日期：2019 年 5 月 8 日

Radiation Protection (Lead Sheet)

检 测 报 告

样品编号：2019-031　　第 1 页，共 1 页

样品名称：铅板

型号规格：200mm × 200mm × 2mm（委托方标称）

样品数量：一块

样品性状：灰色固体板状

检测项目：X 射线防护材料屏蔽性能检测

检测依据：X 射线防护材料衰减性能的测定（GBZ/T147-2002）

主要仪器设备及其编号：NE2550 二级标准剂量仪　J-067

DCI8500 精密电流积分仪 TK30 电离室　J-102

检测日期：2019 年 2 月 25 日　　委托日期：2019 年 1 月 22 日

检测地点：北京市西城区新康街 2 号

委托单位名称：上海神网辐射防护器材有限公司

委托单位地址：上海闵行区华漕镇卫星村南梅巷

委托单位邮编：201100　　联系电话：13651976976

检测结果：

铅当量：2.06mmPb　（120 kV　2.50 mmAl）

扩展不确定度：6.0%（k=2）

以下空白

授权签字人：范[illegible]　　签发日期：2019年[illegible]月[illegible]日

Radiation Protection (Lead Sheet)

6. Appendix (IEC 61331-I)

E-mail: info@fooktsuen.com Tel：3998-3721 Fax：3998-3723
Flat I, 12/F, Block 2, Kingswin Industrial Building, 32-40 Lei Muk Road, Kwai Chung, N.T.

Radiation Protection (Lead Sheet)

IEC–1331–1 > Complete Document History

Protective Devices Against Diagnostic Medical X–Radiation – Part 1: Determination of Attenuation Properties of Materials.

How to Order

Standards We Provide

Updating, Reporting, Audits

Copyright Compliance

Obsolete Revision Information:

REPLACED BY IEC-61331-1 - WITHDRAWN IN 2014 - May 1, 2014
1ST EDITION - Part 1: Determination of Attenuation Properties of Materials - Oct. 1, 1994

Radiation Protection (Lead Sheet)

IEC

IEC 61331-1

Edition 2.0 2014-05

INTERNATIONAL STANDARD

NORME INTERNATIONALE

Protective devices against diagnostic medical X-radiation –
Part 1: Determination of attenuation properties of materials

Dispositifs de protection radiologique contre les rayonnements X pour diagnostic médical –
Partie 1: Détermination des propriétés d'atténuation des matériaux

IEC 61331-1:2014-05(en-fr)

Radiation Protection (Lead Sheet)

IEC Central Office
3, rue de Varembé
CH-1211 Geneva 20
Switzerland

Tel.: +41 22 919 02 11
Fax: +41 22 919 03 00
info@iec.ch
www.iec.ch

About the IEC
The International Electrotechnical Commission (IEC) is the leading global organization that prepares and publishes International Standards for all electrical, electronic and related technologies.

About IEC publications
The technical content of IEC publications is kept under constant review by the IEC. Please make sure that you have the latest edition, a corrigenda or an amendment might have been published.

IEC Catalogue - webstore.iec.ch/catalogue
The stand-alone application for consulting the entire bibliographical information on IEC International Standards, Technical Specifications, Technical Reports and other documents. Available for PC, Mac OS, Android Tablets and iPad.

IEC publications search - www.iec.ch/searchpub
The advanced search enables to find IEC publications by a variety of criteria (reference number, text, technical committee,...). It also gives information on projects, replaced and withdrawn publications.

IEC Just Published - webstore.iec.ch/justpublished
Stay up to date on all new IEC publications. Just Published details all new publications released. Available online and also once a month by email.

Electropedia - www.electropedia.org
The world's leading online dictionary of electronic and electrical terms containing more than 30 000 terms and definitions in English and French, with equivalent terms in 14 additional languages. Also known as the International Electrotechnical Vocabulary (IEV) online.

IEC Glossary - std.iec.ch/glossary
More than 55 000 electrotechnical terminology entries in English and French extracted from the Terms and Definitions clause of IEC publications issued since 2002. Some entries have been collected from earlier publications of IEC TC 37, 77, 86 and CISPR.

IEC Customer Service Centre - webstore.iec.ch/csc
If you wish to give us your feedback on this publication or need further assistance, please contact the Customer Service Centre: csc@iec.ch.

A propos de l'IEC
La Commission Electrotechnique Internationale (IEC) est la première organisation mondiale qui élabore et publie des Normes internationales pour tout ce qui a trait à l'électricité, à l'électronique et aux technologies apparentées.

A propos des publications IEC
Le contenu technique des publications IEC est constamment revu. Veuillez vous assurer que vous possédez l'édition la plus récente, un corrigendum ou amendement peut avoir été publié.

Catalogue IEC - webstore.iec.ch/catalogue
Application autonome pour consulter tous les renseignements bibliographiques sur les Normes internationales, Spécifications techniques, Rapports techniques et autres documents de l'IEC. Disponible pour PC, Mac OS, tablettes Android et iPad.

Recherche de publications IEC - www.iec.ch/searchpub
La recherche avancée permet de trouver des publications IEC en utilisant différents critères (numéro de référence, texte, comité d'études,...). Elle donne aussi des informations sur les projets et les publications remplacées ou retirées.

IEC Just Published - webstore.iec.ch/justpublished
Restez informé sur les nouvelles publications IEC. Just Published détaille les nouvelles publications parues. Disponible en ligne et aussi une fois par mois par email.

Electropedia - www.electropedia.org
Le premier dictionnaire en ligne de termes électroniques et électriques. Il contient plus de 30 000 termes et définitions en anglais et en français, ainsi que les termes équivalents dans 14 langues additionnelles. Egalement appelé Vocabulaire Electrotechnique International (IEV) en ligne.

Glossaire IEC - std.iec.ch/glossary
Plus de 55 000 entrées terminologiques électrotechniques, en anglais et en français, extraites des articles Termes et Définitions des publications IEC parues depuis 2002. Plus certaines entrées antérieures extraites des publications des CE 37, 77, 86 et CISPR de l'IEC.

Service Clients - webstore.iec.ch/csc
Si vous désirez nous donner des commentaires sur cette publication ou si vous avez des questions contactez-nous: csc@iec.ch.

Radiation Protection (Lead Sheet)

IEC

IEC 61331-1

Edition 2.0 2014-05

INTERNATIONAL STANDARD

NORME INTERNATIONALE

Protective devices against diagnostic medical X-radiation –
Part 1: Determination of attenuation properties of materials

Dispositifs de protection radiologique contre les rayonnements X pour diagnostic médical –
Partie 1: Détermination des propriétés d'atténuation des matériaux

INTERNATIONAL
ELECTROTECHNICAL
COMMISSION

COMMISSION
ELECTROTECHNIQUE
INTERNATIONALE

PRICE CODE
CODE PRIX T

ICS 11.040.50

ISBN 978-2-8322-1562-3

Warning! Make sure that you obtained this publication from an authorized distributor.
Attention! Veuillez vous assurer que vous avez obtenu cette publication via un distributeur agréé.

CONTENTS

Radiation Protection (Lead Sheet)

INTERNATIONAL ELECTROTECHNICAL COMMISSION

PROTECTIVE DEVICES AGAINST DIAGNOSTIC MEDICAL X-RADIATION –

Part 1: Determination of attenuation properties of materials

FOREWORD

1) The International Electrotechnical Commission (IEC) is a worldwide organization for standardization comprising all national electrotechnical committees (IEC National Committees). The object of IEC is to promote international co-operation on all questions concerning standardization in the electrical and electronic fields. To this end and in addition to other activities, IEC publishes International Standards, Technical Specifications, Technical Reports, Publicly Available Specifications (PAS) and Guides (hereafter referred to as "IEC Publication(s)"). Their preparation is entrusted to technical committees; any IEC National Committee interested in the subject dealt with may participate in this preparatory work. International, governmental and non-governmental organizations liaising with the IEC also participate in this preparation. IEC collaborates closely with the International Organization for Standardization (ISO) in accordance with conditions determined by agreement between the two organizations.

2) The formal decisions or agreements of IEC on technical matters express, as nearly as possible, an international consensus of opinion on the relevant subjects since each technical committee has representation from all interested IEC National Committees.

3) IEC Publications have the form of recommendations for international use and are accepted by IEC National Committees in that sense. While all reasonable efforts are made to ensure that the technical content of IEC Publications is accurate, IEC cannot be held responsible for the way in which they are used or for any misinterpretation by any end user.

4) In order to promote international uniformity, IEC National Committees undertake to apply IEC Publications transparently to the maximum extent possible in their national and regional publications. Any divergence between any IEC Publication and the corresponding national or regional publication shall be clearly indicated in the latter.

5) IEC itself does not provide any attestation of conformity. Independent certification bodies provide conformity assessment services and, in some areas, access to IEC marks of conformity. IEC is not responsible for any services carried out by independent certification bodies.

6) All users should ensure that they have the latest edition of this publication.

7) No liability shall attach to IEC or its directors, employees, servants or agents including individual experts and members of its technical committees and IEC National Committees for any personal injury, property damage or other damage of any nature whatsoever, whether direct or indirect, or for costs (including legal fees) and expenses arising out of the publication, use of, or reliance upon, this IEC Publication or any other IEC Publications.

8) Attention is drawn to the Normative references cited in this publication. Use of the referenced publications is indispensable for the correct application of this publication.

9) Attention is drawn to the possibility that some of the elements of this IEC Publication may be the subject of patent rights. IEC shall not be held responsible for identifying any or all such patent rights.

International Standard IEC 61331-1 has been prepared by subcommittee 62B: Diagnostic imaging equipment, of IEC technical committee 62: Electrical equipment in medical practice.

This second edition cancels and replaces the first edition of IEC 61331-1, published in 1994. It constitutes a technical revision. This second edition has been adapted to apply to the present technology. In particular, this second edition is consistently applicable to lead- and non-lead-containing materials. The essential changes and extensions are:

– extension of the scope to cover photon-emitting radionuclides;
– improved methods to determine the ATTENUATION RATIO;
– addition of the so-called inverse BROAD BEAM CONDITION;
– addition of a method to calculate the ATTENUATION RATIO of photon-emitting radionuclides;
– definition of new standard X- and gamma RADIATION QUALITIES used for testing;
– addition of the so-called LEAD EQUIVALENT class;

– tables of ATTENUATION RATIOS, BUILD-UP FACTORS and first HALF-VALUE LAYERS for the standard RADIATION QUALITIES filtered with different thicknesses of lead.

The text of this standard is based on the following documents:

FDIS	Report on voting
62B/936/FDIS	62B/942/RVD

Full information on the voting for the approval of this standard can be found in the report on voting indicated in the above table.

This publication has been drafted in accordance with the ISO/IEC Directives, Part 2.

In this standard, the following print types are used:

– requirements and definitions: roman type;.
– informative material appearing outside of tables, such as notes, examples and references: in smaller type. Normative text of tables is also in a smaller type;
– TERMS DEFINED IN CLAUSE 3 OF THIS STANDARD OR AS NOTED: SMALL CAPS.

The verbal forms used in this standard conform to usage described in Annex H of the ISO/IEC Directives, Part 2. For the purposes of this standard, the auxiliary verb:

– "shall" means that compliance with a requirement or a test is mandatory for compliance with this standard;
– "should" means that compliance with a requirement or a test is recommended but is not mandatory for compliance with this standard;
– "may" is used to describe a permissible way to achieve compliance with a requirement or test.

A list of all parts of the IEC 61331 series, published under the general title *Protective devices against diagnostic medical X-radiation*, can be found on the IEC website.

The committee has decided that the contents of this publication will remain unchanged until the stability date indicated on the IEC web site under "http://webstore.iec.ch" in the data related to the specific publication. At this date, the publication will be

- reconfirmed,
- withdrawn,
- replaced by a revised edition, or
- amended.

PROTECTIVE DEVICES AGAINST DIAGNOSTIC MEDICAL X-RADIATION –

Part 1: Determination of attenuation properties of materials

1 Scope

This part of IEC 61331 applies to materials in sheet form used for the manufacturing of PROTECTIVE DEVICES against X-RADIATION of RADIATION QUALITIES generated with X-RAY TUBE VOLTAGES up to 400 kV and gamma radiation emitted by radionuclides with photon energies up to 1,3 MeV.

This Part 1 is not intended to be applied to PROTECTIVE DEVICES when these are to be checked for the presence of their ATTENUATION properties before and after periods of use.

This Part 1 specifies the methods of determining and indicating the ATTENUATION properties of the materials.

The ATTENUATION properties are given in terms of:

- ATTENUATION RATIO;
- BUILD-UP FACTOR;
- ATTENUATION EQUIVALENT;

together with, as appropriate, an indication of homogeneity and mass per unit area.

Ways of stating values of ATTENUATION properties in compliance with this part of the International Standard are included.

Excluded from the scope of this International Standard are:

- methods for periodical checks of PROTECTIVE DEVICES, particularly of PROTECTIVE CLOTHING,
- methods of determining ATTENUATION by layers in the RADIATION BEAM, and
- methods of determining ATTENUATION for purposes of protection against IONIZING RADIATION provided by walls and other parts of an installation.

2 Normative references

The following documents, in whole or in part, are normatively referenced in this document and are indispensable for its application. For dated references, only the edition cited applies. For undated references, the latest edition of the referenced document (including any amendments) applies.

IEC 60601-1:2005, *Medical electrical equipment – Part 1: General requirements for basic safety and essential performance*
IEC 60601-1:2005/AMD1:2012

IEC 60601-1-3:2008, *Medical electrical equipment – Part 1-3: General requirements for basic safety and essential performance – Collateral Standard: Radiation protection in diagnostic X-ray equipment*
IEC 60601-1-3:2008/AMD1:2013

IEC/TR 60788:2004, *Medical electrical equipment – Glossary of defined terms*

Monographie BIPM-5:2013, *Table of Radionuclides*[1]

NISTIR 5632:2004, *Tables of X-Ray Mass Attenuation Coefficients and Mass Energy-Absorption Coefficients (version 1.4)* [on-line, cited 2014-01-30] Available at http://www.nist.gov/pml/data/xraycoef/][2]

3 Terms and definitions

For the purposes of this document, the terms and definitions given in IEC/TR 60788:2004, IEC 60601-1:2005 and IEC 60601-1:2005/AMD 1:2012, IEC 60601-1-3:2008 and IEC 60601-1-3:2008/AMD1:2013 and the following apply.

3.1
ATTENUATION RATIO
ratio of the value of a SPECIFIED RADIATION QUANTITY in the centre of a SPECIFIED RADIATION BEAM of SPECIFIED RADIATION QUALITY, with the attenuating material under consideration outside the beam, to the value at the same position and under the same conditions with this attenuating material placed in the beam

4 Methods to determine the ATTENUATION RATIO

4.1 General

There are four different conditions described in this standard to determine ATTENUATION RATIOS, F:

F_N	ATTENUATION RATIO measured with a NARROW BEAM CONDITION	(4.2)
F_B	ATTENUATION RATIO measured with a BROAD BEAM CONDITION	(4.3)
F_{IB}	ATTENUATION RATIO measured with an inverse BROAD BEAM CONDITION	(4.4)
$F_{N,R}$	ATTENUATION RATIO calculated for a photon-emitting radionuclide, R	(4.5)

4.2 NARROW BEAM CONDITION

4.2.1 General description

The ATTENUATION RATIO F_N for a given test material (or test object) shall be measured according to the arrangement for NARROW BEAM CONDITION as shown in Figure 1. This arrangement is designed to measure the ATTENUATION of the X-RAY BEAM only due to primary photons. The probability that secondary photons such as fluorescence photons or Compton scattered photons from the test object reach the RADIATION DETECTOR is minimized. The aperture in the DIAPHRAGM shall be just large enough to produce the smallest beam covering the radiation detector. An additional DIAPHRAGM (number 5 in Figure 1) shall be used to shield the RADIATION DETECTOR from SCATTERED RADIATION produced in the test object. The distance a from the test object to the reference point of the RADIATION DETECTOR on the beam axis shall be at least ten times the diameter d of the detector or ten times the diameter t of the RADIATION BEAM at the distal surface of the test object , whatever is larger, i.e. $a \geq 10 \max(d,t)$. The minimal distance of the wall or the floor from the detector (position 6 in the Figure 1) in the direction of the beam shall be 700 mm.

4.2.2 AIR KERMA RATE measurements

The AIR KERMA RATE shall be measured under three different conditions with the same RADIATION DETECTOR at the same position, where

[1] Bureau International de Poids et Mesures, Pavillon de Breteeuil, F-92310 Sèvres, ISBN 92-822-2204-7 (set).

[2] National Institute of Standards and Technology (NIST), U.S.Department of Commerce.

v

$\dot{K}_0$ denotes the AIR KERMA RATE without the test object in the RADIATION BEAM;

$\dot{K}_1$ the AIR KERMA RATE with the test object in the RADIATION BEAM;

$\dot{K}_B$ the AIR KERMA RATE with the test object in the beam replaced by a sheet of material of the same shape with an ATTENUATION RATIO greater than 10^5.

The same constant dose rate of the primary beam shall be used for the three measurements. If the mean dose rate of the primary beam varies by more than 0,2 % during the measurements, a monitor shall be used to normalize the three measurements to the same primary beam dose rate.

4.2.3 RADIATION QUALITIES and RADIATION DETECTOR

The RADIATION QUALITIES used for the measurements shall be selected from Table 1 . The RADIATION DETECTOR shall be calibrated in terms of AIR KERMA. The quotient $\dot{K}_0$ divided by $\dot{K}_1$ shall be known with a relative standard uncertainty not more than 2 %.

NOTE The AIR KERMA RESPONSE of the RADIATION DETECTOR can be measured with e.g. NARROW BEAM qualities and the RESPONSE can be plotted as a function of Al or Cu HALF-VALUE LAYERS (HVL). Tables A.4 and A.5 of this standard can be used to look up the approximate Al or Cu HVL of the non-attenuated and attenuated beams. The AIR KERMA RESPONSE in the actual beam can then be evaluated from the plot.

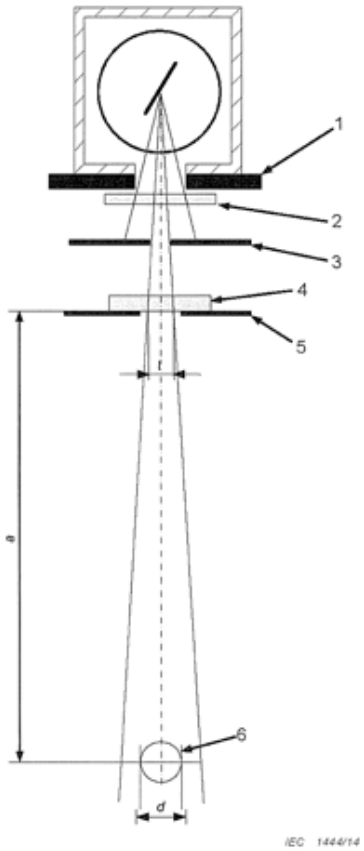

1 DIAPHRAGM
2 Beam filtration
3 Beam-limiting DIAPHRAGM
4 Test object
5 DIAPHRAGM
6 Radiation detector
Condition: $a \geq 10 \max(d, t)$

Figure 1 – NARROW BEAM CONDITION

4.2.4 Signal to noise condition

The following condition shall be fulfilled:

$$\dot{K}_t \geq 10\dot{K}_B$$

4.2.5 ATTENUATION RATIO evaluation

The ATTENUATION RATIO F_N shall be evaluated as:

$$F_N = \frac{\dot{K}_0 - \dot{K}_B}{\dot{K}_1 - \dot{K}_B}$$

4.3 BROAD BEAM CONDITION

4.3.1 General description

The ATTENUATION RATIO F_B for a given test material (or test object) shall be measured according to the arrangement for BROAD BEAM CONDITION as shown in Figure 2. This arrangement is designed to measure the ATTENUATION of the x-ray beam if secondary photons emitted by the material sample are included in the detection of the attenuated beam. The probability that secondary photons such as fluorescence photons or Compton scattered photons from the test object reach the RADIATION DETECTOR is maximized. The distance *a*, from the focal spot to the radiation exit plane of the test object shall be at least three times the diameter *d*, of the beam limiting aperture, i.e. $a \geq 3d$. The aperture diameter *d* shall be at least 10 times greater than the distance *b*, of the reference point of the RADIATION DETECTOR from the surface of the test object, i.e. $d \geq 10b$. *b* shall be chosen as small as possible in order to minimize the ATTENUATION of secondary photons by the amount of air between the reference point of the RADIATION DETECTOR and the point of emission of the secondary photons from the test object. The distance between the outer wall of the chamber and the surface of the test object shall not exceed 10 mm. The minimal distance of the wall or the floor from the detector (position 6 in Figure 2) in the direction of the beam shall be 700 mm.

4.3.2 AIR KERMA RATE measurements

The AIR KERMA RATE shall be measured under three different conditions with the same RADIATION DETECTOR at the same position, where:

$\dot{K}_0$ denotes the AIR KERMA RATE without the test object in the RADIATION BEAM;

$\dot{K}_1$ the AIR KERMA RATE with the test object in the RADIATION BEAM;

$\dot{K}_B$ the AIR KERMA RATE with the test object in the beam replaced by a sheet of material of the same shape with an ATTENUATION RATIO greater than 10^5.

The same constant dose rate of the primary beam shall be used for the three measurements. If the mean dose rate of the primary beam varies by more than 0,2 % during the measurements a monitor shall be used to normalize the three measurements to the same primary beam dose rate. The dose rate of the primary beam at any point in the plane of the beam-limiting aperture shall not vary by more than 2 %.

4.3.3 RADIATION QUALITIES and RADIATION DETECTOR

The RADIATION QUALITIES given in Table 1 shall be used for the measurements. The RADIATION DETECTOR shall be calibrated in terms of AIR KERMA. The quotient $\dot{K}_0$ divided by $\dot{K}_1$ shall be known with a relative standard uncertainty not more than 2 %. The dependence of the response of the RADIATION DETECTOR upon the direction of incidence shall be negligibly small over a hemisphere. It is recommended to use a spherical ionisation chamber.

NOTE The AIR KERMA RESPONSE of the RADIATION DETECTOR can be measured with e.g. NARROW BEAM qualities and the RESPONSE can be plotted as a function of Al or Cu HALF-VALUE LAYERS (HVL). Tables A.4 and A.5 of this standard can be used to look up the approximate Al or Cu HVL of the non-attenuated and attenuated beams. The AIR KERMA RESPONSE in the actual beam can then be evaluated from the plot.

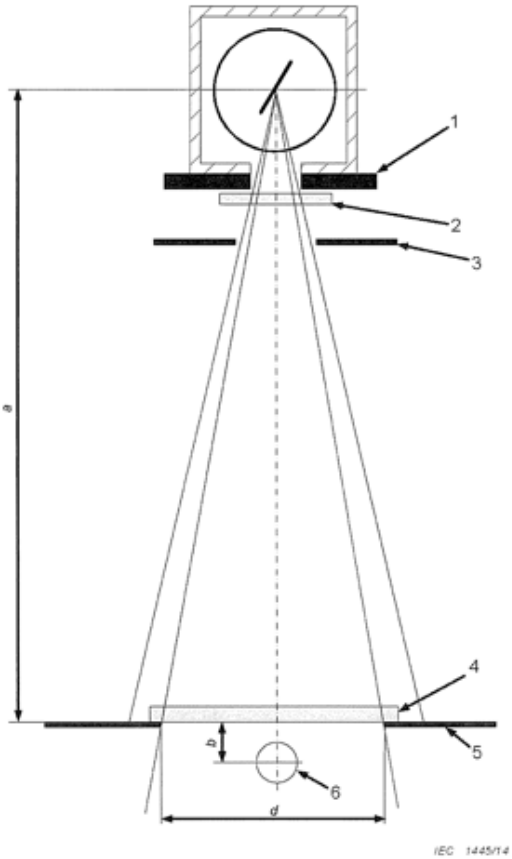

1 DIAPHRAGM
2 Beam filtration
3 DIAPHRAGM
4 Test object
5 Beam-limiting DIAPHRAGM
6 Radiation detector
Conditions: $a \geq 3\,d$, $d \geq 10\,b$

Figure 2 – BROAD BEAM CONDITION

4.3.4 Signal to noise condition

The following condition shall be fulfilled:

$$\dot{K}_1 \geq 10\dot{K}_B$$

4.3.5 ATTENUATION RATIO evaluation

The ATTENUATION RATIO F_B shall be evaluated as:

$$F_B = \frac{\dot{K}_0 - \dot{K}_B}{\dot{K}_1 - \dot{K}_B}$$

4.4 Inverse BROAD BEAM CONDITION

4.4.1 General description

The geometry of the inverse BROAD BEAM shown in Figure 3 is an alternative method to measure the ATTENUATION RATIO F_B. In order to distinguish from the conventional method, it is designated as F_{IB}. In contrast to the conventional method described in 4.2 where a BROAD BEAM impinges on a large area piece of the test object and a small RADIATION DETECTOR closely behind the test object is used, the inverse method is characterized by a NARROW BEAM impinging on a small area piece of the test object and a large area flat RADIATION DETECTOR immediately behind the test object. A flat ionisation chamber shall be used for this purpose. This method has some advantages because it is easy to use, has low measuring uncertainties, need only small field sizes and small sheets of material. It shall be used for the determination of the ATTENUATION properties of materials used for PROTECTIVE CLOTHING and PROTECTIVE DEVICES for gonads in medical x-ray diagnostic described in IEC 61331-3. The method as described here shall not be used for RADIATION QUALITIES with X-RAY TUBE VOLTAGES above 150 kV. The distance *a*, from the focal spot to the entrance plane of the measuring DIAPHRAGM shall not be less than 5 times the diameter of the DIAPHRAGM aperture, *d*, i.e. $a \geq 5\,d$. The test object can be fixed to the exit plane of the measuring DIAPHRAGM. The distance *b*, between the radiation exit plane of the test object and the flat ionisation chamber shall be chosen to be as close as possible. The following condition shall be fulfilled: $D - d \geq 10\,b$. The distance *b* shall not exceed 5 mm. The minimal distance of the wall or the floor from the detector (position 6 in the Figure 3) in the direction of the beam shall be 700 mm.

4.4.2 AIR KERMA RATE measurements

The AIR KERMA RATE shall be measured under three different conditions with the same RADIATION DETECTOR at the same position, where:

$\dot{K}_0$ denotes the AIR KERMA RATE without the test object in the RADIATION BEAM;

$\dot{K}_1$ the AIR KERMA RATE with the test object in the RADIATION BEAM;

$\dot{K}_B$ the AIR KERMA RATE with the test object in the beam replaced by a sheet of material of the same shape with an ATTENUATION RATIO greater than 10^5.

The same constant dose rate of the primary beam shall be used for the three measurements. If the mean dose rate of the primary beam varies by more than 0,2 % during the measurements, a monitor shall be used to normalize the three measurements to the same primary beam dose rate.

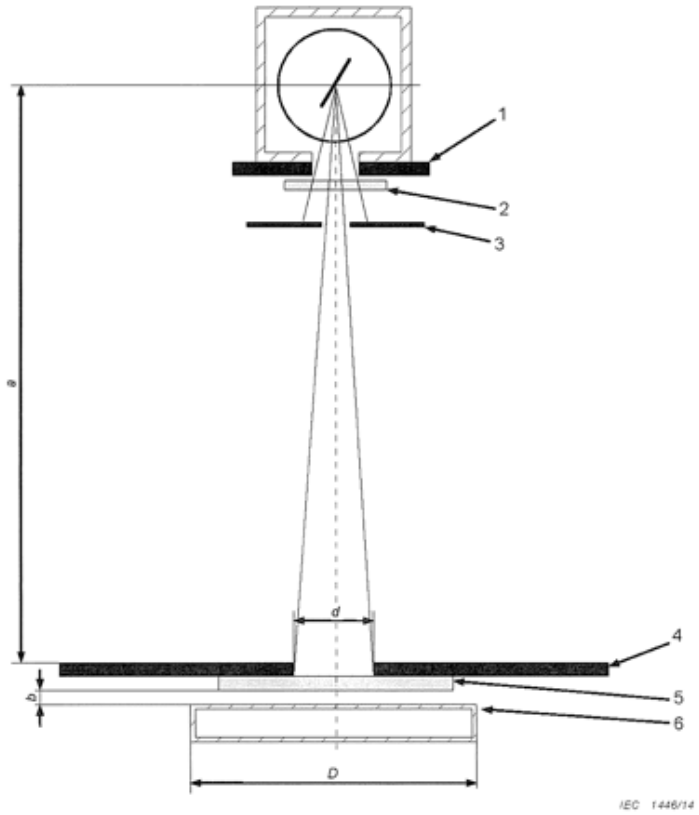

1 DIAPHRAGM
2 Beam filtration
3 DIAPHRAGM
4 Measuring DIAPHRAGM
5 Test object
6 Flat measuring chamber

Conditions: $a \geq 5\,d$, $D - d \geq 10\,b$, $b \leq 5$ mm

Figure 3 – Inverse BROAD BEAM CONDITION

4.4.3 RADIATION QUALITIES and RADIATION DETECTOR

The RADIATION QUALITIES given in Table 1 shall be used for the measurements. The flat ionisation chamber shall be calibrated in terms of AIR KERMA under the same irradiation conditions as used in the measurements. The quotient $\dot{K}_0$ divided by $\dot{K}_1$ shall be known with a relative standard uncertainty not more than 2%.

NOTE The AIR KERMA RESPONSE of the RADIATION DETECTOR can be measured with e.g. NARROW BEAM qualities and the RESPONSE can be plotted as a function of Al HALF-VALUE LAYERS (HVL). Table A.4 of this standard can be

used to look up the approximate Al HVL of the non-attenuated and attenuated beams. The AIR KERMA RESPONSE in the actual beam can then be evaluated from the plot.

4.4.4 Signal to noise condition

The following condition shall be fulfilled:

$$\dot{K}_1 \geq 10\dot{K}_B$$

4.4.5 ATTENUATION RATIO evaluation

The ATTENUATION RATIO F_{IB} shall be evaluated as:

$$F_{IB} = \frac{\dot{K}_0 - \dot{K}_B}{\dot{K}_1 - \dot{K}_B}$$

4.5 Calculation of the ATTENUATION RATIO for photon-emitting radionuclides

4.5.1 Equation

The ATTENUATION RATIO $F_{N,R}$ for a given test material to protect against the photon-emitting radionuclide R shall be calculated according to the following equation:

$$F_{N,R} = \frac{\sum_i \left(\frac{\mu_{en}(E_i)}{\rho}\right)_{air} p(E_i)E_i}{\sum_i \left(\frac{\mu_{en}(E_i)}{\rho}\right)_{air} p(E_i)E_i e^{-\left(\frac{\mu(E_i)}{\rho}\right)_m d\rho}}, \quad E_i \geq 20\ \text{keV}$$

where

E_i	is the energy of the *i*-th photon emitted per decay
$p(E_i)$	is the photon emission probability per decay event for photons with energy E_i
$\left(\frac{\mu_{en}(E_i)}{\rho}\right)_{air}$	is the mass energy-absorption coefficient of air for photons with energy E_i
$\left(\frac{\mu(E_i)}{\rho}\right)_m$	is the mass ATTENUATION COEFFICIENT of the test material for photons with energy E_i
d	is the thickness of the test material
ρ	is the density of the test material

4.5.2 Decay data

Photon energies E_i and photon emission probabilities $p(E_i)$ shall be taken from the Monographie BIPM-5: Table of Radionuclides.

4.5.3 Mass ATTENUATION and mass energy-absorption coefficients

Mass ATTENUATION and mass energy-absorption coefficients shall be taken from NISTIR 5632: Tables of X-Ray Mass Attenuation Coefficients and Mass Energy-Absorption Coefficients.

4.5.4 Verification of the mass- ATTENUATION COEFFICIENTS of the test material

The test material's mass ATTENUATION COEFFICIENTS used in 4.5.1 shall be verified by comparison of measured values of F_N according to 4.2 with calculated values $F_{N,C}$ according to the procedure described in the following. A set of standard RADIATION QUALITIES of Tables 1 and 2 shall be used which covers approximately the energy range of the photons emitted by the radionuclide. Measurements for the standard gamma RADIATION QUALITIES listed in Table 2 shall be done with a NARROW BEAM CONDITION similar to that shown in Figure 1. The distribution of the photon fluence with respect to the photon energies of the standard RADIATION QUALITIES shall be known for this purpose. The value of F_N of the photon fluence spectra shall be evaluated according to the following formula:

$$F_{N,C} = \frac{\sum_i \left(\frac{\mu_{en}(E_i)}{\rho}\right)_{air} \phi(E_i)E_i}{\sum_i \left(\frac{\mu_{en}(E_i)}{\rho}\right)_{air} \phi(E_i)E_i e^{-\left(\frac{\mu(E_i)}{\rho}\right)_m d\rho}}$$

where

E_i is the energy attributed to the channel i containing all photons with energies between $E_i - \frac{\Delta}{2}$ and $E_i + \frac{\Delta}{2}$

$\phi(E_i)$ is the number of photons contained in channel i

and the other symbols have the same meaning as in the equation of 4.5.1.

The condition $|1 - F_N / F_{N,C}| \leq 0{,}2$ shall be fulfilled for the chosen set of qualities.

Table 1 – Standard RADIATION QUALITIES for X-RAY BEAMS

Tube voltage (nominal) kV	TOTAL FILTRATION (nominal)		1st HVL (nominal)		AIR KERMA RATE 1 m, 10 mA (approximately) mGy/s
	mm Al	mm Cu	mm Al	mm Cu	
30	2,5		0,99		0,1
40	2,5		1,44		0,2
50	2,5		1,81		0,3
60	2,5		2,14		0,4
70	2,5		2,44		0,5
80	2,5		2,77		0,6
90	2,5		3,10		0,8
100	2,5		3,44		0,9
110	2,5		3,79		1,0
120	2,5		4,13		1,2
130	2,5		4,48		1,4
140	2,5		4,82		1,6
150	2,5		5,17		2
200		1,2	14,6	1,63	1
250		1,8	16,8	2,53	1,5
300		2,5	18,6	3,37	2
400		3,5	20,8	4,51	3

The X-RAY TUBE VOLTAGE shall not differ from the nominal values by more than 2 % or 2 kV, whatever is less. The aluminium filter shall be of 99,9 % purity or higher and density 2,70 g cm^{-3}. The copper filter shall be of 99,9 % purity or higher and density 8,90 g cm^{-3} The thickness of the aluminium and copper filters shall not differ from the nominal values by more than 0,1 mm. The first Al and Cu HALF-VALUE LAYERS and the approximate AIR KERMA RATES are given for information only.

Table 2 – Standard gamma RADIATION QUALITIES according to ISO 4037-1

Gamma sources	Code ISO 4037	RADIATION ENERGY keV	Half life days	AIR KERMA RATE constant of the pure source µGy h^{-1} m^2 MBq^{-1}
Cs-137	S-Cs	661,6	11 050	0,079
Co-60	S-Co	1 173,3; 1 332,5	1 925,5	0,31

5 Determination of ATTENUATION properties

5.1 ATTENUATION RATIO

5.1.1 Determination

The ATTENUATION RATIOS F_N, F_B, F_{IB} and $F_{N,R}$ shall be determined according to 4.2, 4.3, 4.4 and 4.5, respectively.

5.1.2 Indication

The ATTENUATION RATIOS F_N, F_B, F_{IB} and $F_{N,R}$ shall be indicated by its numerical value together with the method of determination (NARROW BEAM, BROAD BEAM, inverse BROAD BEAM, or calculated) and the RADIATION QUALITY in terms of the beam code, the X-RAY TUBE VOLTAGE and HALF-VALUE LAYER or the code of the radionuclide (see Clause 6).

5.2 BUILD-UP FACTOR

5.2.1 Determination

The BUILD-UP FACTOR B shall be determined according to the equations

$$B = \frac{F_N}{F_B} \text{ or } B = \frac{F_N}{F_{IB}}$$

depending on the method used for the BROAD BEAM measurement, where F_N, F_B and F_{IB} refer to the numbers obtained by measurements according to 4.2, 4.3 and 4.4, respectively. F_N and F_B or F_N and F_{IB}, respectively, shall be done in the beam of the same x-ray facility.

5.2.2 Indication

The BUILD-UP FACTOR shall be indicated by its numerical value together with the RADIATION QUALITY in terms of the beam code, the X-RAY TUBE VOLTAGE and HALF-VALUE LAYER (see Clause 6).

5.3 ATTENUATION EQUIVALENT

5.3.1 Determination

The ATTENUATION EQUIVALENTS δ_N, δ_B, δ_{IB} and , $\delta_{N,R}$ shall be determined by measurements of F_N, F_B and F_{IB} according to 4.2, 4.3 and 4.4, or calculations of $F_{N,R}$ according to 4.5, respectively, for the material under test and by comparison with the thickness of a layer of the reference material resulting within given tolerances in the same values of F_N, F_B, F_{IB} and

$F_{N,R}$, respectively. The measurements for the material and the reference material shall be done in the same beam of the same x-ray facility.

5.3.2 Indication

The ATTENUATION EQUIVALENT shall be indicated in thickness of the reference material in mm together with the method used for the determination (NARROW BEAM, BROAD BEAM, inverse BROAD BEAM or calculated), the chemical symbol or other identification of the reference material and the RADIATION QUALITY in terms of the beam code, the X-RAY TUBE VOLTAGE and HALF-VALUE LAYER or the code of the radionuclide (see Clause 6).

5.4 LEAD EQUIVALENT

5.4.1 Determination

The LEAD EQUIVALENT shall be determined as ATTENUATION EQUIVALENT, but with (a) layer(s) of lead as reference material.

NOTE LEAD EQUIVALENT values of a test material can be obtained by interpolation from measured ATTENUATION RATIOS of lead sheets of different thicknesses covering the range of interest.

5.4.2 Indication

The LEAD EQUIVALENT shall be indicated in thickness of lead in mm together with the chemical symbol for lead and the method used for the determination (NARROW BEAM, BROAD BEAM, inverse BROAD BEAM, calculated) and the RADIATION QUALITY in terms of the X-RAY TUBE VOLTAGE and HALF-VALUE LAYER or the code of the radionuclide (see Clause 6).

5.5 LEAD EQUIVALENT class for a SPECIFIED range of RADIATION QUALITIES

5.5.1 Materials

Some materials used for PROTECTIVE CLOTHING and protective patient shields in medical x-ray diagnostic as described in IEC 61331-3 need the definition of the LEAD EQUIVALENT value for a SPECIFIED range of RADIATION QUALITIES. The conditions for the assignment of such a value are described in the following subclauses.

5.5.2 Standard thicknesses

The LEAD EQUIVALENT value shall be assigned to a material for one of the following classes of lead thickness: 0,25 mm, 0,35 mm, 0,5 mm and 1 mm.

5.5.3 Conditions for assignment to a LEAD EQUIVALENT class

The LEAD EQUIVALENT class shall be assigned to a material if at least one of the following two conditions is fulfilled for a SPECIFIED range of RADIATION QUALITIES selected from the full range 30 kV – 150 kV, see Table 1:

1) The ATTENUATION RATIO F_{IB} of a material for a special RADIATION QUALITY is greater than 250.
2) The LEAD EQUIVALENT δ_{IB}, by definition determined with the inverse BROAD BEAM method according to 4.4, is equal or greater than a standard thickness of lead SPECIFIED in 5.5.2. A relative standard uncertainty of 7 % in the determination of the LEAD EQUIVALENT shall be taken into account in the decision of conformity, thus, if t_{Pb} is the standard lead thickness and δ_{IB} is the LEAD EQUIVALENT of the test material, the condition can be written as:

$$\delta_{IB} \geq 0{,}93\, t_{PB}$$

5.5.4 Indication

The LEAD EQUIVALENT range shall be indicated in the standard thickness of lead in mm together with the chemical symbol for lead followed by the specification of the X-RAY TUBE VOLTAGE range in kV (see Clause 6).

5.6 Homogeneity

5.6.1 Determination

The homogeneity of a protective material shall be determined from measured values of F_N obtained over the area of the test object under the conditions of 4.2 and the corresponding values of ATTENUATION EQUIVALENT $\delta_{N,i}$.

These values $\delta_{N,i}$ shall be determined

- for 5 to 10 representative places, or
- continuously in representative directions over the area of the test object.

The deviation from homogeneity V of the protective material shall be determined as the greatest deviation of a single value of ATTENUATION EQUIVALENT $\delta_{N,i}$ from the mean value of ATTENUATION EQUIVALENT $\bar{\delta}_N$:

$$\bar{\delta}_N = \frac{1}{n}\sum_{i=1}^{n}\delta_{N,i}$$

$$V = \left|\bar{\delta}_N - \delta_{N,i}\right|_{max}$$

5.6.2 Indication

The inhomogeneity shall be indicated together with the ATTENUATION EQUIVALENT as tolerance in the same units, e.g.:

3 mm ± 0,2 mm Pb, NARROW BEAM, 100 kV, HVL = 3,44 mm Al (see Clause 6).

6 Statement of compliance

If for SPECIFIED ATTENUATION properties compliance with this part of IEC 61331 shall be stated, this shall be indicated as follows, e.g.:

- attenuation ratio 2×10^2: narrow beam 200 kV HVL = 1,64 mm Cu IEC 61331-1:2014;
- attenuation ratio 20: narrow beam Cs-137 IEC 61331-1:2014;
- attenuation ratio 15: calculated Ir-192 IEC 61331-1: 2014;
- build-up factor 1,4: 150 kV HVL = 5,17 mm Al IEC 61331-1:2014;
- attenuation equivalent 2 mm Fe: narrow beam 100 kV HVL = 3,44 mm Al IEC 61331-1:2014;
- attenuation equivalent 2 mm ± 0,1 mm Fe: narrow beam 100 kV HVL = 3,44 mm Al IEC 61331-1:2014;
- lead equivalent 1 mm Pb: narrow beam 300 kV HVL = 3,37 mm Cu IEC 61331-1:2014;
- lead equivalent 1 mm Pb: broad beam 300 kV HVL = 3,37 mm Cu IEC 61331-1:2014;
- lead equivalent 0,25 mm Pb: inverse broad beam 60 – 120 kV IEC 61331-1:2014.

Annex A
(informative)

Tables of ATTENUATION RATIOS, BUILD-UP FACTORS and first HALF-VALUE LAYERS

Tables A.1 to A.5 contain calculated values of ATTENUATION RATIOS, BUILD-UP FACTORS and first HALF-VALUE LAYERS of the RADIATION QUALITIES of Table 1 when filtered with additional layers of the reference material lead. Calculations are based on primary photon fluence spectra measured at the Physikalisch-Technische Bundesanstalt (PTB), Braunschweig, Germany. The values serve as guidance for testing laboratories to confirm their results. Actual values measured at testing laboratories may differ from these values by several percent due to differences in the photon fluence spectra and RADIATION DETECTORS used in measurements.

Radiation Protection (Lead Sheet)

Table A.1 – ATTENUATION RATIOS F_N of lead thicknesses from 0,125 mm to 2 mm calculated for RADIATION QUALITIES of Table 1 according to the formula given in 4.5.4

mm Pb	30 kV	40 kV	50 kV	60 kV	70 kV	80 kV	90 kV	100 kV	110 kV	120 kV	130 kV	140 kV	150 kV
0	1,00E+00	1,00E+00	1,00E+00	1,00E+00	1,00E+00	1,00E+00	1,00E+00	1,00E+00	1,00E+00	1,00E+00	1,00E+00	1,00E+00	1,00E+00
0,125	8,65E+02	7,84E+01	2,70E+01	1,49E+01	1,01E+01	7,41E+00	5,88E+00	5,06E+00	4,53E+00	4,14E+00	3,83E+00	3,57E+00	3,36E+00
0,25	1,64E+05	1,50E+03	1,98E+02	6,63E+01	3,31E+01	1,97E+01	1,37E+01	1,11E+01	9,67E+00	8,67E+00	7,87E+00	7,19E+00	6,61E+00
0,35		1,24E+04	7,78E+02	1,79E+02	7,12E+01	3,68E+01	2,33E+01	1,84E+01	1,59E+01	1,42E+01	1,28E+01	1,16E+01	1,05E+01
0,5			5,08E+03	6,74E+02	1,95E+02	8,29E+01	4,64E+01	3,54E+01	3,04E+01	2,71E+01	2,44E+01	2,20E+01	1,96E+01
1				3,14E+04	3,34E+03	7,89E+02	3,04E+02	2,10E+02	1,78E+02	1,61E+02	1,47E+02	1,32E+02	1,14E+02
1,5					4,09E+04	5,53E+03	1,48E+03	9,42E+02	7,82E+02	7,10E+02	6,58E+02	5,97E+02	5,15E+02
2						3,35E+04	6,24E+03	3,72E+03	3,03E+03	2,75E+03	2,57E+03	2,37E+03	2,04E+03

E-mail: info@fooktsuen.com Tel : 3998-3721 Fax : 3998-3723
Flat I, 12/F, Block 2, Kingswin Industrial Building, 32-40 Lei Muk Road, Kwai Chung, N.T.

Radiation Protection (Lead Sheet)

Table A.5 – First HALF-VALUE LAYERS in mm Cu of RADIATION QUALITIES of Table 1 as a function of additional lead filters of different thicknesses in the range from 0,125 mm to 4 mm

mm Pb	200 kV	250 kV	300 kV	400 kV
0	1,6	2,5	3,4	4,5
0,125	1,8	2,8	3,7	4,9
0,25	2,0	3,1	4,0	5,1
0,35	2,2	3,3	4,2	5,3
0,5	2,4	3,6	4,5	5,5
1	3,0	4,2	5,0	6,0
1,5	3,4	4,6	5,3	6,3
2	3,7	4,9	5,5	6,5
2,5	3,9	5,0	5,7	6,6
3	4,1	5,1	5,8	6,7
3,5	4,2	5,2	5,9	6,8
4	4,3	5,3	5,9	6,9

Bibliography

IEC 61331-3, *Protective devices against diagnostic medical X-radiation – Part 3: Protective clothing and protective devices for gonads*

ISO 4037-1, *X and gamma reference radiation for calibrating dosemeters and doserate meters and for determining their response as a function of photon energy – Part 1: Radiation characteristics and production methods*

Index of defined terms used in this International Standard

NOTE In the present document terms defined either in IEC 60601-1:2005 and IEC 60601-1:2005/AMD1:2012, IEC 60601-1-3:2008 and IEC 60601-1-3:2008/AMD1:2013, in IEC/TR 60788:2004 or in this International Standard have been used. These defined terms can be looked up at the IEC website http://std.iec.ch/glossary .

SOMMAIRE

Radiation Protection (Lead Sheet)

COMMISSION ÉLECTROTECHNIQUE INTERNATIONALE

DISPOSITIFS DE PROTECTION RADIOLOGIQUE CONTRE LES RAYONNEMENTS X POUR DIAGNOSTIC MÉDICAL –

Partie 1: Détermination des propriétés d'atténuation des matériaux

AVANT-PROPOS

1) La Commission Electrotechnique Internationale (IEC) est une organisation mondiale de normalisation composée de l'ensemble des comités électrotechniques nationaux (Comités nationaux de l'IEC). L'IEC a pour objet de favoriser la coopération internationale pour toutes les questions de normalisation dans les domaines de l'électricité et de l'électronique. A cet effet, l'IEC – entre autres activités – publie des Normes internationales, des Spécifications techniques, des Rapports techniques, des Spécifications accessibles au public (PAS) et des Guides (ci-après dénommés "Publication(s) de l'IEC"). Leur élaboration est confiée à des comités d'études, aux travaux desquels tout Comité national intéressé par le sujet traité peut participer. Les organisations internationales, gouvernementales et non gouvernementales, en liaison avec l'IEC, participent également aux travaux. L'IEC collabore étroitement avec l'Organisation Internationale de Normalisation (ISO), selon des conditions fixées par accord entre les deux organisations.

2) Les décisions ou accords officiels de l'IEC concernant les questions techniques représentent, dans la mesure du possible, un accord international sur les sujets étudiés, étant donné que les Comités nationaux de l'IEC intéressés sont représentés dans chaque comité d'études.

3) Les Publications de l'IEC se présentent sous la forme de recommandations internationales et sont agréées comme telles par les Comités nationaux de l'IEC. Tous les efforts raisonnables sont entrepris afin que l'IEC s'assure de l'exactitude du contenu technique de ses publications; l'IEC ne peut pas être tenue responsable de l'éventuelle mauvaise utilisation ou interprétation qui en est faite par un quelconque utilisateur final.

4) Dans le but d'encourager l'uniformité internationale, les Comités nationaux de l'IEC s'engagent, dans toute la mesure possible, à appliquer de façon transparente les Publications de l'IEC dans leurs publications nationales et régionales. Toutes divergences entre toutes Publications de l'IEC et toutes publications nationales ou régionales correspondantes doivent être indiquées en termes clairs dans ces dernières.

5) L'IEC elle-même ne fournit aucune attestation de conformité. Des organismes de certification indépendants fournissent des services d'évaluation de conformité et, dans certains secteurs, accèdent aux marques de conformité de l'IEC. L'IEC n'est responsable d'aucun des services effectués par les organismes de certification indépendants.

6) Tous les utilisateurs doivent s'assurer qu'ils sont en possession de la dernière édition de cette publication.

7) Aucune responsabilité ne doit être imputée à l'IEC, à ses administrateurs, employés, auxiliaires ou mandataires, y compris ses experts particuliers et les membres de ses comités d'études et des Comités nationaux de l'IEC, pour tout préjudice causé en cas de dommages corporels et matériels, ou de tout autre dommage de quelque nature que ce soit, directe ou indirecte, ou pour supporter les coûts (y compris les frais de justice) et les dépenses découlant de la publication ou de l'utilisation de cette Publication de l'IEC ou de toute autre Publication de l'IEC, ou au crédit qui lui est accordé.

8) L'attention est attirée sur les références normatives citées dans cette publication. L'utilisation de publications référencées est obligatoire pour une application correcte de la présente publication.

9) L'attention est attirée sur le fait que certains des éléments de la présente Publication de l'IEC peuvent faire l'objet de droits de brevet. L'IEC ne saurait être tenue pour responsable de ne pas avoir identifié de tels droits de brevets et de ne pas avoir signalé leur existence.

La Norme internationale IEC 61331-1 a été établie par le sous-comité 62B: Appareils d'imagerie de diagnostic, du comité d'études 62 de l'IEC: Équipements électriques dans la pratique médicale.

Cette deuxième édition annule et remplace la première édition de l'IEC 61331-1, parue en 1994. Elle constitue une révision technique. Cette deuxième édition a été adaptée pour s'appliquer à la technologie actuelle. La présente deuxième édition est en particulier applicable aux matériaux qui contiennent du plomb et à ceux qui n'en contiennent pas. Les principales modifications et extensions sont les suivantes:

– extension du domaine d'application pour couvrir les radionucléides à émission de photons;
– méthodes améliorées de détermination de l'INDICE D'ATTENUATION;
– addition d'une CONDITION dite de FAISCEAU LARGE inversé;

- addition d'une méthode de calcul de l'INDICE D'ATTENUATION des radionucléides à émission de photons;
- définition de nouvelles QUALITES DE RAYONNEMENT X et gamma normalisées utilisées pour les essais;
- addition d'une classe dite d'EQUIVALENT PLOMB;
- tableaux d'INDICES D'ATTENUATION, de FACTEURS D'ACCUMULATION et de premières COUCHES DE DEMI-ATTENUATION pour les QUALITES DE RAYONNEMENT normalisées filtrés avec différentes épaisseurs de plomb.

Le texte anglais de cette norme est issu des documents 62B/936/FDIS et 62B/942/RVD. Le rapport de vote 62B/942/RVD donne toute information sur le vote ayant abouti à l'approbation de cette norme.

La version française de cette norme n'a pas été soumise au vote.

Cette publication a été rédigée selon les Directives ISO/IEC, Partie 2.

Dans la présente norme, les caractères d'imprimerie suivants sont utilisés:

- exigences et définitions: caractères romains;
- indications de nature informative apparaissant hors des tableaux, comme les notes, les exemples et les références: petits caractères. Le texte normatif à l'intérieur des tableaux est également en petits caractères;
- TERMES DEFINIS A L'ARTICLE 3 DE LA PRESENTE NORME OU COMME NOTES: PETITES MAJUSCULES.

Les formes verbales utilisées dans la présente norme sont conformes à l'usage donné à l'Annexe H des Directives ISO/IEC, Partie 2. Pour les besoins de la présente norme:

- "devoir" mis au présent de l'indicatif signifie que la satisfaction à une exigence ou à un essai est obligatoire pour la conformité à la présente norme;
- "il convient/il est recommandé" signifie que la satisfaction à une exigence ou à un essai est recommandée mais n'est pas obligatoire pour la conformité à la présente norme;
- "pouvoir" mis au présent de l'indicatif est utilisé pour décrire un moyen admissible pour satisfaire à une exigence ou à un essai.

Une liste de toutes les parties de la série CEI 61331-1, publiée sous le titre général *Dispositifs de protection radiologique contre les rayonnements X pour diagnostic médical*, figure sur le site web de la CEI.

Le comité a décidé que le contenu de cette publication ne sera pas modifié avant la date de stabilité indiquée sur le site web de l'IEC sous "http://webstore.iec.ch" dans les données relatives à la publication recherchée. A cette date, la publication sera

- reconduite,
- supprimée,
- remplacée par une édition révisée, ou
- amendée.

DISPOSITIFS DE PROTECTION RADIOLOGIQUE CONTRE LES RAYONNEMENTS X POUR DIAGNOSTIC MÉDICAL –

Partie 1: Détermination des propriétés d'atténuation des matériaux

1 Domaine d'application

La présente partie de la Norme internationale IEC 61331 s'applique aux matériaux en plaques utilisés pour la fabrication des DISPOSITIFS DE PROTECTION RADIOLOGIQUE contre les RAYONNEMENTS X dont les QUALITES DE RAYONNEMENT sont celles générées avec des HAUTES TENSIONS RADIOGENES allant jusqu'à 400 kV et les rayonnements gamma émis par des radionucléides ayant une énergie photonique égale au plus à 1,3 MeV.

La présente Partie 1 n'est pas prévue pour être appliquée aux DISPOSITIFS DE PROTECTION RADIOLOGIQUE lorsqu'il doit être procédé à la vérification de leurs propriétés d'ATTENUATION avant et après les périodes d'utilisation.

La présente Partie 1 spécifie les méthodes de détermination et d'indication des propriétés d'ATTÉNUATION des matériaux.

Les propriétés d'ATTENUATION sont indiquées dans les termes suivants:

- INDICE D'ATTÉNUATION;
- FACTEUR D'ACCUMULATION;
- EQUIVALENT D'ATTENUATION;

avec, selon le cas, une indication d'homogénéité et de masse surfacique.

Les manières d'énoncer les valeurs des propriétés d'ATTENUATION en conformité avec la présente partie de la Norme internationale sont incluses.

Les méthodes suivantes sont exclues du domaine d'application de la présente Norme internationale:

- les méthodes relatives aux vérifications périodiques des DISPOSITIFS DE PROTECTION RADIOLOGIQUE, en particulier des VETEMENTS DE PROTECTION RADIOLOGIQUE;
- les méthodes de détermination de l'ATTENUATION procurée par les couches dans le FAISCEAU DE RAYONNEMENT; et
- les méthodes de détermination de l'ATTENUATION à des fins de protection contre les RAYONNEMENTS IONISANTS procurée par les murs et autres parties structurelles d'une installation.

2 Références normatives

Les documents ci-après, dans leur intégralité ou non, sont des références normatives indispensables à l'application du présent document. Pour les références datées, seule l'édition citée s'applique. Pour les références non datées, la dernière édition du document de référence s'applique (y compris les éventuels amendements).

IEC 60601-1:2005, *Appareils électromédicaux – Partie 1: Exigences générales pour la sécurité de base et les performances essentielles*
IEC 60601-1:2005/AMD1:2012

IEC 60601-1-3:2008, *Appareils électromédicaux – Partie 1-3: Exigences générales pour la sécurité de base et les performances essentielles – Norme collatérale: Radioprotection dans les appareils à rayonnement X de diagnostic*
IEC 60601-1-3:2008/AMD1:2013

IEC/TR 60788:2004, *Medical electrical equipment – Glossary of defined terms* (disponible en anglais seulement)

Monographie BIPM-5:2013, *Table of Radionuclides*[1]

NISTIR 5632:2004, *Tables of X-Ray Mass Attenuation Coefficients and Mass Energy-Absorption Coefficients (version 1.4)* [en ligne, cité 2014-01-30] Disponible à http://www.nist.gov/pml/data/xraycoef/][2]

3 Termes et définitions

Pour les besoins du présent document, les termes et définitions figurant dans l'IEC/TR 60788:2004, l'IEC 60601-1:2005 et l' IEC 60601-1:2005/AMD 1:2012 et l'IEC 60601-1-3:2008 et l'IEC 60601-1-3:2008/AMD1:2013 ainsi que la définition suivante s'appliquent.

3.1
INDICE D'ATTENUATION
rapport entre la valeur d'une GRANDEUR LIEE AU RAYONNEMENT SPECIFIEE au centre d'un FAISCEAU DE RAYONNEMENT SPECIFIE de QUALITE DE RAYONNEMENT SPECIFIEE, l'absorbeur considéré étant situé à l'extérieur du faisceau, et la valeur définie dans la même position et dans les mêmes conditions, l'absorbeur étant placé à l'intérieur du faisceau

4 Méthodes de détermination de l'INDICE D'ATTENUATION

4.1 Généralités

Quatre conditions différentes sont décrites dans la présente norme pour déterminer les INDICES D'ATTÉNUATION, F:

F_N INDICE D'ATTÉNUATION mesuré en CONDITION DE FAISCEAU ÉTROIT (4.2)
F_B INDICE D'ATTÉNUATION mesuré en CONDITION DE FAISCEAU LARGE (4.3)
F_{IB} INDICE D'ATTÉNUATION mesuré en CONDITION DE FAISCEAU LARGE inversé (4.4)
$F_{N,R}$ INDICE D'ATTÉNUATION calculé pour un radionucléide à émission de photons, R (4.5)

4.2 CONDITION DE FAISCEAU ÉTROIT

4.2.1 Description générale

L'INDICE D'ATTENUATION F_N pour un matériau d'essai (ou un objet soumis à l'essai) donné doit être mesuré selon le dispositif pour la CONDITION DE FAISCEAU ETROIT tel qu'il est représenté à la Figure 1. Ce dispositif est conçu pour mesurer l'ATTENUATION du FAISCEAU A RAYON X résultant uniquement de photons primaires. La probabilité que des photons secondaires tels que des photons à fluorescence ou des photons diffusés par l'effet Compton provenant de l'objet soumis à l'essai atteignent le DETECTEUR DE RAYONNEMENT est minimisée. L'ouverture dans le DIAPHRAGME doit être juste assez large pour produire le plus petit faisceau couvrant le détecteur de rayonnement. Un DIAPHRAGME supplémentaire (numéro 5 dans la Figure 1) doit

[1] Bureau International de Poids et Mesures, Pavillon de Breteeuil, F-92310 Sèvres, ISBN 92-822-2204-7 (ensemble).

[2] National Institute of Standards and Technology (NIST), U.S.Department of Commerce.

être utilisé pour protéger le DETECTEUR DE RAYONNEMENT du RAYONNEMENT DIFFUSE, produit dans l'objet soumis à l'essai. La distance *a*, séparant l'objet soumis à l'essai du point de référence du DETECTEUR DE RAYONNEMENT sur l'axe du faisceau, doit être au moins égale à dix fois le diamètre *d* du détecteur ou dix fois le diamètre *t* du FAISCEAU DE RAYONNEMENT à la surface éloignée de l'objet soumis à l'essai, en prenant celle des deux valeurs qui est la plus importante, c'est-à-dire $a \geq 10 \max(d,t)$. La distance minimale entre le mur ou le sol et le détecteur (position 6 dans la Figure 1) dans la direction du faisceau doit être de 700 mm.

4.2.2 Mesures du DEBIT DE KERMA DANS L'AIR

Le DÉBIT DE KERMA DANS L'AIR doit être mesuré dans trois conditions différentes avec le même DETECTEUR DE RAYONNEMENT au même emplacement où:

$\dot{K}_0$ désigne le DÉBIT DE KERMA DANS L'AIR, l'objet soumis à l'essai étant placé à l'extérieur du FAISCEAU DE RAYONNEMENT;

$\dot{K}_1$ DEBIT DE KERMA DANS L'AIR, l'objet soumis à l'essai étant placé à l'intérieur du FAISCEAU DE RAYONNEMENT;

$\dot{K}_B$ DEBIT DE KERMA DANS L'AIR en remplaçant l'objet soumis à l'essai placé dans le faisceau par une plaque de matériau de la même forme avec un INDICE D'ATTENUATION supérieur à 10^5.

Le même débit de dose constant du faisceau primaire doit être utilisé pour les trois mesures. Si le débit de dose moyen du faisceau primaire varie de plus de 0,2 % au cours des mesures, on doit utiliser un moniteur pour normaliser les trois mesures selon le même débit de dose du faisceau primaire.

4.2.3 QUALITES DE RAYONNEMENT et DETECTEUR DE RAYONNEMENT

Les QUALITES DE RAYONNEMENT utilisées pour les mesures doivent être choisies dans le Tableau 1. Le DETECTEUR DE RAYONNEMENT doit être étalonné en termes de KERMA DANS L'AIR. Le quotient $\dot{K}_0$ divisé par $\dot{K}_1$ doit être connu avec une incertitude normalisée relative inférieure ou égale à 2 %.

NOTE La réponse du KERMA DANS L'AIR du DETECTEUR DE RAYONNEMENT peut être mesurée en utilisant, par exemple, les qualités du FAISCEAU ETROIT et la réponse peut être représentée en fonction des COUCHES DE DEMI-ATTENUATION (CDA) d'aluminium ou de cuivre. Les Tableaux A.4 et A.5 de la présente norme peuvent être utilisés pour vérifier les CDA approximatives d'aluminium ou de cuivre des faisceaux atténués et non atténués. La REPONSE du KERMA DANS L'AIR dans le faisceau réel peut alors être évaluée à partir du schéma.

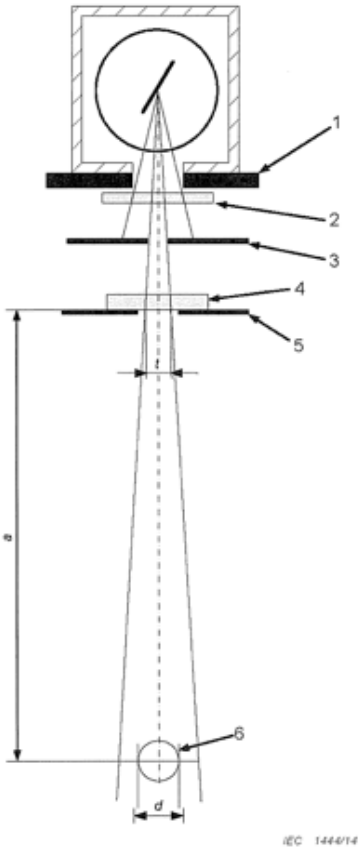

1 DIAPHRAGME
2 Filtration du faisceau
3 DIAPHRAGME de limitation du faisceau
4 Objet soumis à l'essai
5 DIAPHRAGME
6 Détecteur de rayonnement
Condition: a ≥ 10 max(d,t)

Figure 1 –CONDITION DE FAISCEAU ETROIT

4.2.4 Condition de signal sur bruit

La condition suivante doit être remplie:

$$\dot{K}_1 \geq 10\dot{K}_B$$

4.2.5 Évaluation de l'INDICE D'ATTENUATION

L'INDICE D'ATTENUATION F_N doit être évalué comme suit:

$$F_N = \frac{\dot{K}_0 - \dot{K}_B}{\dot{K}_1 - \dot{K}_B}$$

4.3 CONDITION DE FAISCEAU LARGE

4.3.1 Description générale

L'INDICE D'ATTÉNUATION F_B pour un matériau d'essai (ou un objet soumis à l'essai) donné doit être mesuré selon le dispositif pour la CONDITION DE FAISCEAU LARGE tel que représenté à la Figure 2. Ce dispositif est destiné à mesurer l'ATTENUATION du faisceau à rayon X si des photons secondaires émis par l'échantillon de matériau sont inclus dans la détection du faisceau atténué. La probabilité que des photons secondaires tels que des photons à fluorescence ou des photons diffusés par l'effet Compton provenant de l'objet soumis à l'essai atteignent le DETECTEUR DE RAYONNEMENT est optimisée. La distance *a*, comprise entre le foyer et le plan de sortie du rayonnement de l'objet soumis à l'essai, doit être au moins égale au triple du diamètre *d*, de l'ouverture de limitation du faisceau, c'est-à-dire $a \geq 3d$. Le diamètre d'ouverture *d* doit être au moins 10 fois supérieur à la distance *b*, du point de référence du DETECTEUR DE RAYONNEMENT par rapport à la surface de l'objet soumis à l'essai, c'est-à-dire $d \geq 10b$. *b* doit avoir la plus petite valeur possible afin de minimiser l'ATTENUATION des photons secondaires par la quantité d'air entre le point de référence du DETECTEUR DE RAYONNEMENT et le point d'émission des photons secondaires à partir de l'objet soumis à l'essai. La distance entre le mur extérieur de la chambre et la surface de l'objet soumis à l'essai ne doit pas dépasser 10 mm. La distance minimale entre le mur ou le sol et le détecteur (position 6 dans la Figure 2) dans la direction du faisceau doit être de 700 mm.

4.3.2 Mesures du DEBIT DE KERMA DANS L'AIR

Le DEBIT DE KERMA DANS L'AIR doit être mesuré dans trois conditions différentes avec le même DETECTEUR DE RAYONNEMENT au même emplacement où:

$\dot{K}_0$ désigne le DEBIT DE KERMA DANS L'AIR, l'objet soumis à l'essai étant placé à l'extérieur du FAISCEAU DE RAYONNEMENT;

$\dot{K}_1$ DEBIT DE KERMA DANS L'AIR, l'objet soumis à l'essai étant placé à l'intérieur du FAISCEAU DE RAYONNEMENT;

$\dot{K}_B$ DEBIT DE KERMA DANS L'AIR, en remplaçant l'objet soumis à l'essai placé dans le faisceau par une plaque de matériau de la même forme avec un INDICE D'ATTENUATION supérieur à 10^5.

Le même débit de dose constant du faisceau primaire doit être utilisé pour les trois mesures. Si le débit de dose moyen du faisceau primaire varie de plus de 0,2 % au cours des mesures, on doit utiliser un moniteur pour normaliser les trois mesures selon le même débit de dose du faisceau primaire. Le débit de dose du faisceau primaire en un point quelconque du plan de l'ouverture de limitation du faisceau ne doit pas varier de plus de 2 %.

4.3.3 QUALITES DE RAYONNEMENT et DETECTEUR DE RAYONNEMENT

Les QUALITES DE RAYONNEMENT indiquées dans le Tableau 1 doivent être utilisées pour les mesures. Le DETECTEUR DE RAYONNEMENT doit être étalonné en termes de KERMA DANS L'AIR. Le quotient $\dot{K}_0$ divisé par $\dot{K}_1$ doit être connu avec une incertitude normalisée relative inférieure ou égale à 2 %. La dépendance de la réponse du DETECTEUR DE RAYONNEMENT vis-à-vis de la direction d'incidence doit être négligeable dans un demi-plan. Il est recommandé d'utiliser une chambre d'ionisation sphérique.

Radiation Protection (Lead Sheet)

NOTE La réponse du KERMA DANS L'AIR du DETECTEUR DE RAYONNEMENT peut être mesurée en utilisant, par exemple, les qualités du FAISCEAU ETROIT et la REPONSE peut être représentée en fonction des couches de demi-atténuation (CDA) d'aluminium ou de cuivre. Les Tableaux A.4 et A.5 de la présente norme peuvent être utilisés pour vérifier les CDA approximatives d'aluminium ou de cuivre des faisceaux atténués et non atténués. La REPONSE du KERMA DANS L'AIR dans le faisceau réel peut alors être évaluée à partir du schéma.

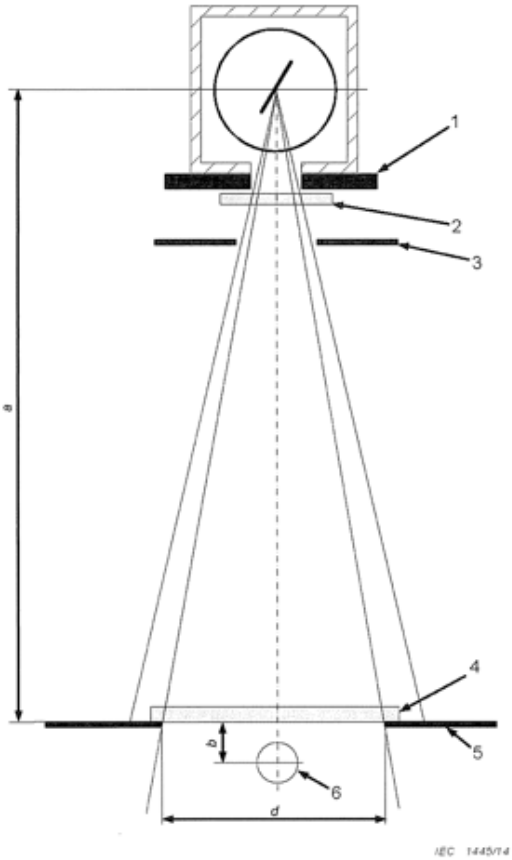

1 DIAPHRAGME
2 Filtration du faisceau
3 DIAPHRAGME
4 Objet soumis à l'essai
5 DIAPHRAGME de limitation du faisceau
6 Détecteur de rayonnement

Conditions: $a \geq 3\,d$, $d \geq 10\,b$

Figure 2 – CONDITION DE FAISCEAU LARGE

E-mail: info@fooktsuen.com Tel：3998-3721 Fax：3998-3723
Flat I, 12/F, Block 2, Kingswin Industrial Building, 32-40 Lei Muk Road, Kwai Chung, N.T.

4.3.4 Condition de signal sur bruit

La condition suivante doit être remplie:

$$\dot{K}_1 \geq 10\dot{K}_B$$

4.3.5 Évaluation de l'INDICE D'ATTENUATION

L'INDICE D'ATTENUATION F_B doit être évalué comme suit:

$$F_B = \frac{\dot{K}_0 - \dot{K}_B}{\dot{K}_1 - \dot{K}_B}$$

4.4 CONDITION DE FAISCEAU LARGE inversé

4.4.1 Description générale

La géométrie du FAISCEAU LARGE inversé représentée à la Figure 3 constitue une méthode alternative de mesure de l'INDICE D'ATTENUATION F_B. Afin de la distinguer de la méthode classique, on la désigne par F_{IB}. Contrairement à la méthode classique décrite en 4.2 dans laquelle un FAISCEAU LARGE frappe une large zone de l'objet soumis à l'essai et où l'on utilise un petit DETECTEUR DE RAYONNEMENT placé à proximité immédiate derrière l'objet soumis à l'essai, la méthode inversée se caractérise par un FAISCEAU ETROIT frappant une petite zone de l'objet soumis à l'essai et une large zone plate du DETECTEUR DE RAYONNEMENT placé à proximité immédiate derrière l'objet soumis à l'essai. Une chambre d'ionisation plate doit être utilisée à cet effet. Cette méthode présente certains avantages car elle est facile d'utilisation, présente de faibles incertitudes de mesure, et nécessite seulement des champs et des plaques de matériau de petites dimensions. Elle doit être utilisée afin de déterminer les propriétés d'ATTENUATION des matériaux utilisés pour les VETEMENTS DE PROTECTION RADIOLOGIQUE et les DISPOSITIFS DE PROTECTION RADIOLOGIQUE des gonades dans le cadre du diagnostic médical par rayonnement X décrits dans l'IEC 61331-3. La méthode décrite ici ne doit pas être utilisée pour des QUALITES DE RAYONNEMENT dont les HAUTES TENSIONS RADIOGENES sont supérieures à 150 kV. La distance *a*, séparant le foyer du plan d'entrée du DIAPHRAGME de mesure ne doit pas être inférieure à 5 fois le diamètre de l'ouverture du DIAPHRAGME, *d*, c'est-à-dire $a \geq 5\,d$. L'objet soumis à l'essai peut être fixé au plan de sortie du DIAPHRAGME de mesure. La distance *b*, entre le plan de sortie du rayonnement de l'objet soumis à l'essai et la chambre d'ionisation plate doit être aussi réduite que possible. La condition suivante doit être remplie: $D - d \geq 10\,b$. La distance *b* ne doit pas dépasser 5 mm. La distance minimale entre le mur ou le sol et le détecteur (position 6 dans la Figure 3) dans la direction du faisceau doit être de 700 mm.

4.4.2 Mesures du DEBIT DE KERMA DANS L'AIR

Le DEBIT DE KERMA DANS L'AIR doit être mesuré dans trois conditions différentes avec le même DETECTEUR DE RAYONNEMENT au même emplacement où:

$\dot{K}_0$ désigne le DEBIT DE KERMA DANS L'AIR, l'objet soumis à l'essai étant placé à l'extérieur du FAISCEAU DE RAYONNEMENT;

$\dot{K}_1$ DEBIT DE KERMA DANS L'AIR, l'objet soumis à l'essai étant placé à l'intérieur du FAISCEAU DE RAYONNEMENT;

$\dot{K}_B$ DEBIT DE KERMA DANS L'AIR, en remplaçant l'objet soumis à l'essai placé dans le faisceau par une plaque de matériau de la même forme avec un INDICE D'ATTENUATION supérieur à 10^5.

Le même débit de dose constant du faisceau primaire doit être utilisé pour les trois mesures. Si le débit de dose moyen du faisceau primaire varie de plus de 0,2 % environ au cours des

mesures, on doit utiliser un moniteur pour normaliser les trois mesures selon le même débit de dose du faisceau primaire.

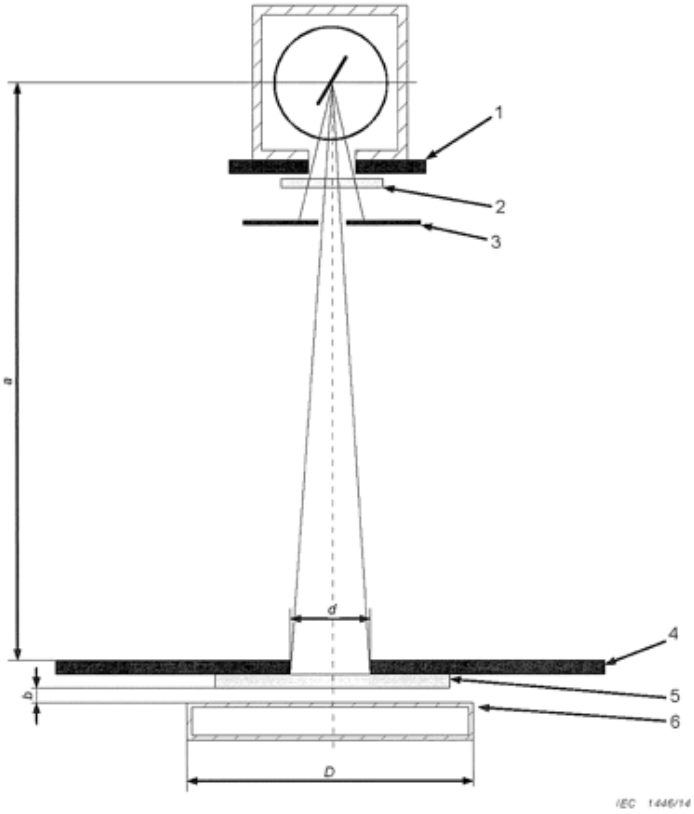

1 DIAPHRAGME
2 Filtration du faisceau
3 DIAPHRAGME
4 DIAPHRAGME de mesure
5 Objet soumis à l'essai
6 Chambre de mesure plate

Conditions: $a \geq 5\,d$, $D - d \geq 10\,b$, $b \leq 5$ mm

Figure 3 –CONDITION DE FAISCEAU LARGE inversé

4.4.3 QUALITES DE RAYONNEMENT et DETECTEUR DE RAYONNEMENT

Les QUALITES DE RAYONNEMENT indiquées dans le Tableau 1 doivent être utilisées pour les mesures. La chambre d'ionisation plate doit être étalonnée en termes de KERMA DANS L'AIR dans les mêmes conditions d'irradiation que celles utilisées dans les mesures. Le quotient $\dot{K}_0$

divisé par $\dot{K}_1$ doit être connu avec une incertitude normalisée relative inférieure ou égale à 2 %.

NOTE La REPONSE DU KERMA DANS L'AIR du DETECTEUR DE RAYONNEMENT peut être mesurée en utilisant, par exemple, les qualités du FAISCEAU ETROIT et la réponse peut être représentée en fonction des COUCHES DE DEMI-ATTENUATION (CDA) d'aluminium. Le Tableau A.4 de la présente norme peut être utilisé pour vérifier les CDA approximatives d'aluminium des faisceaux atténués et non-atténués. La réponse du KERMA DANS L'AIR dans le faisceau réel peut alors être évaluée à partir du schéma.

4.4.4 Condition de signal sur bruit

La condition suivante doit être remplie:

$$\dot{K}_1 \geq 10\dot{K}_B$$

4.4.5 Évaluation de l'INDICE D'ATTENUATION

L'INDICE D'ATTENUATION F_{IB} doit être évalué comme suit:

$$F_{IB} = \frac{\dot{K}_0 - \dot{K}_B}{\dot{K}_1 - \dot{K}_B}$$

4.5 Calcul de l'INDICE D'ATTENUATION pour les radionucléides à émission de photons

4.5.1 Équation

L'INDICE D'ATTENUATION $F_{N,R}$ pour un matériau d'essai donné pour protéger contre les radionucléides à émission de photons R doit être calculé selon la formule suivante:

$$F_{N,R} = \frac{\sum_i \left(\frac{\mu_{en}(E_i)}{\rho}\right)_{air} p(E_i)E_i}{\sum_i \left(\frac{\mu_{en}(E_i)}{\rho}\right)_{air} p(E_i)E_i e^{-\left(\frac{\mu(E_i)}{\rho}\right)_m d\rho}}, \quad E_i \geq 20\,\text{keV}$$

où

E_i est l'énergie du i-ème photon émis par désintégration

$p(E_i)$ est la probabilité d'émission de photons par désintégration pour les photons ayant une énergie E_i

$\left(\frac{\mu_{en}(E_i)}{\rho}\right)_{air}$ est le coefficient d'absorption d'énergie massique de l'air pour les photons ayant une énergie E_i

$\left(\frac{\mu(E_i)}{\rho}\right)_m$ est le COEFFICIENT D'ATTÉNUATION massique du matériau d'essai pour les photons ayant une énergie E_i

d est l'épaisseur du matériau d'essai

ρ est la densité du matériau d'essai

4.5.2 Données de désintégration

Les énergies de photon E_i et les probabilités d'émission de photons $p(E_i)$ doivent être extraites de la Monographie BIPM-5: Table of Radionuclides.

4.5.3 Coefficients D'ATTENUATION massique et d'absorption de l'énergie massique

Les coefficients D'ATTENUATION massique et d'absorption de l'énergie massique doivent être extraits du NISTIR 5632: Tables of X-Ray Mass Atténuation Coefficients and Mass Energy-Absorption Coefficients" [2].

4.5.4 Vérification des COEFFICIENTS D'ATTENUATION massique du matériau d'essai

Les COEFFICIENTS D'ATTENUATION massique du matériau d'essai utilisés en 4.5.1 doivent être vérifiés en comparant les valeurs mesurées de F_N conformément à 4.2 avec les valeurs calculées $F_{N,C}$ suivant la procédure décrite ci-après. On doit utiliser un ensemble de QUALITES DE RAYONNEMENT normalisées figurant dans les Tableaux 1 et 2, couvrant approximativement la gamme d'énergie des photons émis par le radionucléide. Les mesures des QUALITES DE RAYONNEMENT gamma normalisées répertoriées dans le Tableau 2 doivent être réalisées avec une CONDITION DE FAISCEAU ETROIT similaire à celle présentée à la Figure 1. La distribution de la fluence photonique par rapport aux énergies photoniques des QUALITES DE RAYONNEMENT normalisées doit être connue à cette fin. La valeur F_N des spectres de fluence photonique doit être évaluée conformément à la formule suivante:

$$F_{N,C} = \frac{\sum_i \left(\frac{\mu_{en}(E_i)}{\rho}\right)_{air} \phi(E_i)E_i}{\sum_i \left(\frac{\mu_{en}(E_i)}{\rho}\right)_{air} \phi(E_i)E_i e^{-\left(\frac{\mu(E_i)}{\rho}\right)_m d\rho}}$$

où

E_i est l'énergie attribuée au canal i contenant tous les photons ayant des énergies comprises entre $E_i - \frac{\Delta}{2}$ et $E_i + \frac{\Delta}{2}$

$\phi(E_i)$ est le nombre de photons contenus dans le canal i

et les autres symboles ont la même signification que dans l'équation de 4.5.1.

La condition $|1 - F_N / F_{N,C}| \leq 0{,}2$ doit être remplie pour l'ensemble de qualités choisi.

Tableau 1 – QUALITES DE RAYONNEMENT normalisées pour les FAISCEAUX A RAYON-X

Haute tension radiogène (nominale) kV	FILTRATION TOTALE (nominale)		1ère CDA (nominale)		DÉBIT DE KERMA DANS L'AIR 1 m, 10 mA (approximativement) mGy/s
	mm Al	mm Cu	mm Al	mm Cu	
30	2,5		0,99		0,1
40	2,5		1,44		0,2
50	2,5		1,81		0,3
60	2,5		2,14		0,4
70	2,5		2,44		0,5
80	2,5		2,77		0,6
90	2,5		3,10		0,8
100	2,5		3,44		0,9
110	2,5		3,79		1,0
120	2,5		4,13		1,2
130	2,5		4,48		1,4
140	2,5		4,82		1,6
150	2,5		5,17		2
200		1,2	14,6	1,63	1
250		1,8	16,8	2,53	1,5
300		2,5	18,6	3,37	2
400		3,5	20,8	4,51	3

La valeur de la HAUTE TENSION RADIOGENE ne doit pas s'écarter des valeurs nominales de plus de 2 % ou 2 kV, en fonction de la valeur la plus faible. Le filtre d'aluminium doit avoir une pureté d'au moins 99,9% et une densité de 2,70 g cm^{-3}. Le filtre de cuivre doit avoir une pureté d'au moins 99,9% et une densité de 8,90 g cm^{-3}. L'épaisseur des filtres d'aluminium et de cuivre ne doit pas s'écarter des valeurs nominales de plus de 0,1 mm. Les premières COUCHES DE DEMI-ATTENUATION en aluminium et en cuivre ainsi que les DEBITS DE KERMA DANS L'AIR approximatifs sont indiqués uniquement à titre d'information.

Tableau 2 – QUALITES DE RAYONNEMENT gamma normalisées selon l'ISO 4037-1

Sources gamma	Code ISO 4037	ÉNERGIE DE RAYONNEMENT keV	Demi-vie jours	Constante du DEBIT DE KERMA DANS L'AIR de la source pure $\mu Gy\ h^{-1}\ m^2\ MBq^{-1}$
Cs-137	S-Cs	661,6	11 050	0,079
Co-60	S-Co	1 173,3; 1 332,5	1 925,5	0,31

5 Détermination des propriétés D'ATTENUATION

5.1 INDICE D'ATTENUATION

5.1.1 Détermination

Les INDICES D'ATTENUATION F_N, F_B, F_{IB} et $F_{N,R}$ doivent être déterminés respectivement selon 4.2, 4.3, 4.4 et 4.5.

5.1.2 Indication

Les INDICES D'ATTENUATION F_N, F_B, F_{IB} et $F_{N,R}$ doivent être indiqués par leur valeur numérique et par la méthode de détermination (FAISCEAU ETROIT, FAISCEAU LARGE, FAISCEAU LARGE inversé ou par calcul), la QUALITE DE RAYONNEMENT en termes de code de faisceau, de HAUTE TENSION RADIOGENE et de COUCHE DE DEMI-ATTENUATION ou de code du radionucléide (voir Article 6).

5.2 FACTEUR D'ACCUMULATION

5.2.1 Détermination

Le FACTEUR D'ACCUMULATION B doit être déterminé par les équations

$$B = \frac{F_N}{F_B} \text{ ou } B = \frac{F_N}{F_{IB}}$$

en fonction de la méthode utilisée pour la mesure de FAISCEAU LARGE, où F_N, F_B et F_{IB} font référence aux nombres obtenus par les mesures réalisées conformément à 4.2, 4.3 et au 4.4, respectivement. F_N et F_B ou F_N et F_{IB}, respectivement, doivent être mesurés dans le faisceau de la même installation à rayons X.

5.2.2 Indication

Le FACTEUR D'ACCUMULATION doit être indiqué par sa valeur numérique et par la QUALITE DE RAYONNEMENT en termes de code de faisceau, de HAUTE TENSION RADIOGENE et de COUCHE DE DEMI-ATTENUATION (voir Article 6).

5.3 EQUIVALENT D'ATTENUATION

5.3.1 Détermination

Les EQUIVALENTS D'ATTENUATION δ_N, δ_B, δ_{IB} et $\delta_{N,R}$ doivent être déterminés par les mesures de F_N, F_B et F_{IB} conformément à 4.2, 4.3 et 4.4, ou par les calculs de $F_{N,R}$ conformément à 4.5, respectivement, pour le matériau soumis à l'essai et par comparaison avec l'épaisseur d'une couche du matériau de référence produisant, dans les limites des tolérances données, les mêmes valeurs de F_N, F_B, F_{IB} et $F_{N,R}$, respectivement. Les mesures relatives au matériau et au matériau de référence doivent être réalisées dans le même faisceau de la même l'installation à rayons X.

5.3.2 Indication

L'EQUIVALENT D'ATTENUATION doit être indiqué en épaisseur du matériau de référence en mm et avec la méthode utilisée pour la détermination (FAISCEAU ETROIT, FAISCEAU LARGE, FAISCEAU LARGE inversé ou par calcul), le symbole chimique ou une autre identification du matériau de référence et la QUALITE DE RAYONNEMENT en termes de code de faisceau, de HAUTE TENSION RADIOGENE et de COUCHE DE DEMI-ATTENUATION ou de code du radionucléide (voir Article 6).

5.4 ÉQUIVALENT PLOMB

5.4.1 Détermination

L'EQUIVALENT PLOMB doit être déterminé de la même façon que L'EQUIVALENT D'ATTENUATION, mais avec une (des) couche(s) de plomb comme matériau de référence.

NOTE Les valeurs de L'EQUIVALENT PLOMB d'un matériau d'essai peuvent être obtenues par interpolation des INDICES D'ATTENUATION mesurés pour des plaques de plomb de différentes épaisseurs couvrant la plage concernée.

5.4.2 Indication

L'EQUIVALENT PLOMB doit être indiqué en épaisseur de plomb en mm avec le symbole chimique du plomb et avec la méthode utilisée pour la détermination (FAISCEAU ETROIT, FAISCEAU LARGE, FAISCEAU LARGE inversé ou par calcul) et la QUALITE DE RAYONNEMENT en termes de HAUTE TENSION RADIOGENE et de COUCHE DE DEMI-ATTENUATION ou de code du radionucléide (voir l'Article 6).

5.5 Classe D'EQUIVALENT PLOMB pour une plage SPECIFIEE de QUALITES DE RAYONNEMENT

5.5.1 Matériaux

Certains matériaux utilisés pour les VETEMENTS DE PROTECTION RADIOLOGIQUE et pour les équipements de protection des patients en radiodiagnostic médical, tels que décrits dans l'IEC 61331-3, nécessitent de définir la valeur de L'EQUIVALENT PLOMB pour une plage SPECIFIEE de QUALITES DE RAYONNEMENT. Les conditions d'attribution d'une telle valeur sont décrites dans les paragraphes suivants.

5.5.2 Épaisseurs normalisées

La valeur de L'EQUIVALENT PLOMB doit être attribuée à un matériau pour l'une des classes suivantes d'épaisseur de plomb: 0,25 mm, 0,35 mm, 0,5 mm et 1 mm.

5.5.3 Conditions d'attribution d'une classe D'EQUIVALENT PLOMB

La classe D'EQUIVALENT PLOMB doit être attribuée à un matériau si l'une au moins des deux conditions suivantes est remplie pour une plage SPECIFIEE de QUALITES DE RAYONNEMENT choisie dans la plage complète comprise entre 30 kV et 150 kV, voir Tableau 1:

1) L'INDICE D'ATTENUATION F_{IB} d'un matériau pour une QUALITE DE RAYONNEMENT spéciale est supérieur à 250.
2) L'EQUIVALENT PLOMB δ_{IB}, par définition déterminé avec la méthode du FAISCEAU LARGE inversé, conformément à 4.4, est supérieur ou égal à l'épaisseur normalisée du plomb SPECIFIEE en 5.5.2. Une incertitude normalisée relative de 7 % dans la détermination de L'EQUIVALENT PLOMB doit être prise en compte dans le cadre de la décision de conformité; ainsi, si t_{Pb} est l'épaisseur normalisée du plomb et δ_{IB} est L'EQUIVALENT PLOMB du matériau d'essai, la condition peut se traduire par:

$$\delta_{IB} \geq 0{,}93\, t_{PB}$$

5.5.4 Indication

La plage D'EQUIVALENTS PLOMB doit être indiquée en épaisseur normalisée du plomb, en mm, ainsi que par le symbole chimique du plomb suivi de la spécification de la plage de HAUTES TENSIONS RADIOGENES en kV. (Voir Article 6).

5.6 Homogénéité

5.6.1 Détermination

L'homogénéité d'un matériau de protection doit être déterminée à partir des valeurs mesurées de F_N obtenues sur la surface de l'objet soumis à l'essai dans les conditions décrites en 4.2 et à partir des valeurs correspondantes de L'EQUIVALENT D'ATTENUATION $\delta_{N,i}$.

Ces valeurs $\delta_{N,i}$ doivent être déterminées

- pour 5 à 10 endroits représentatifs, ou
- d'une façon continue dans des directions représentatives sur la surface de l'objet soumis à l'essai.

L'écart par rapport à l'homogénéité V du matériau de protection doit être déterminé comme l'écart maximal entre une seule valeur de L'EQUIVALENT D'ATTENUATION $\delta_{N,i}$ et la valeur moyenne de L'EQUIVALENT D'ATTENUATION $\bar{\delta}_N$

$$\bar{\delta}_N = \frac{1}{n}\sum_{i=1}^{n}\delta_{N,i}$$

$$V = \left|\bar{\delta}_N - \delta_{N,i}\right|_{max}$$

5.6.2 Indication

L'hétérogénéité doit être indiquée avec L'EQUIVALENT D'ATTENUATION, comme une tolérance exprimée dans les mêmes unités, par exemple:

3 mm ± 0,2 mm Pb, FAISCEAU ETROIT, 100 kV, HVL = 3,44 mm Al (voir Article 6).

6 Déclaration de conformité

Si, pour des propriétés d'ATTENUATION SPECIFIEES, la conformité avec la présente partie de la Norme internationale doit être établie, celle-ci doit être indiquée comme suit, par exemple:

- Indice d'atténuation 2×10^2: faisceau étroit 200 kV CDA = 1,64 mm Cu IEC 61331-1:2014;
- Indice d'atténuation 20: faisceau étroit Cs-137 IEC 61331-1:2014;
- Indice d'atténuation 15: par calcul Ir-192 IEC 61331-1:2014;
- facteur d'accumulation 1,4: 150 kV CDA = 5,17 mm Al IEC 61331-1:2014;
- équivalent d'atténuation 2 mm Fe: faisceau étroit 100 kV CDA = 3,44 mm Al IEC 61331-1:2014;
- équivalent d'atténuation 2 mm 0,1 mm Fe: faisceau étroit 100 kV CDA = 3,44 mm Al IEC 61331-1:2014;
- équivalent plomb 1 mm Pb: faisceau étroit 300 kV CDA = 3,37 mm Cu IEC 61331-1:2014;
- équivalent plomb 1 mm Pb: faisceau large 300 kV CDA= 3,37 mm Cu IEC 61331-1:2014;
- équivalent plomb 0,25 mm Pb: faisceau large inversé 60 – 120 kV IEC 61331-1:2014;

Annexe A
(informative)

Tableaux des INDICES D'ATTENUATION, des FACTEURS D'ACCUMULATION et des premières COUCHES DE DEMI-ATTENUATION

Les tableaux A.1 à A.5 contiennent des valeurs calculées d'INDICES D'ATTENUATION, de FACTEURS D'ACCUMULATION et de premières COUCHES DE DEMI-ATTENUATION des QUALITES DE RAYONNEMENT du Tableau 1 dans des conditions de filtrage avec des couches supplémentaires de plomb comme matériau de référence. Les calculs sont basés sur les spectres de fluence photonique primaires mesurés à la Physikalisch-Technische Bundesanstalt (PTB), Braunschweig, Allemagne. Ces valeurs servent de lignes directrices aux laboratoires d'essai pour la confirmation de leurs résultats. Les valeurs réelles mesurées dans les laboratoires d'essai peuvent différer de ces valeurs de plusieurs pourcents en raison des différences des spectres de fluence photonique et des DETECTEURS DE RAYONNEMENT utilisés dans les mesures.

Radiation Protection (Lead Sheet)

Tableau A.1 – INDICES D'ATTENUATION F_N des épaisseurs de plomb comprises entre 0,125 mm et 2 mm calculés pour les QUALITES DE RAYONNEMENT du Tableau 1 conformément à la formule indiquée en 4.5.4

mm Pb	30 kV	40 kV	50 kV	60 kV	70 kV	80 kV	90 kV	100 kV	110 kV	120 kV	130 kV	140 kV	150 kV
0	1,00E+00	1,00E+00	1,00E+00	1,00E+00	1,00E+00	1,00E+00	1,00E+00	1,00E+00	1,00E+00	1,00E+00	1,00E+00	1,00E+00	1,00E+00
0,125	8,65E+02	7,84E+01	2,70E+01	1,49E+01	1,01E+01	7,41E+00	5,88E+00	5,06E+00	4,53E+00	4,14E+00	3,83E+00	3,57E+00	3,36E+00
0,25	1,64E+05	1,50E+03	1,98E+02	6,63E+01	3,31E+01	1,97E+01	1,37E+01	1,11E+01	9,67E+00	8,67E+00	7,87E+00	7,19E+00	6,61E+00
0,35		1,24E+04	7,78E+02	1,79E+02	7,12E+01	3,68E+01	2,33E+01	1,84E+01	1,59E+01	1,42E+01	1,28E+01	1,16E+01	1,05E+01
0,5			5,08E+03	6,74E+02	1,95E+02	8,29E+01	4,64E+01	3,54E+01	3,04E+01	2,71E+01	2,44E+01	2,20E+01	1,96E+01
1				3,14E+04	3,34E+03	7,89E+02	3,04E+02	2,10E+02	1,78E+02	1,61E+02	1,47E+02	1,32E+02	1,14E+02
1,5					4,09E+04	5,53E+03	1,48E+03	9,42E+02	7,82E+02	7,10E+02	6,58E+02	5,97E+02	5,15E+02
2						3,35E+04	6,24E+03	3,72E+03	3,03E+03	2,75E+03	2,57E+03	2,37E+03	2,04E+03

E-mail: info@fooktsuen.com Tel : 3998-3721 Fax : 3998-3723
Flat I, 12/F, Block 2, Kingswin Industrial Building, 32-40 Lei Muk Road, Kwai Chung, N.T.

Tableau A.2 – FACTEUR D'ACCUMULATION *B* mesuré pour les QUALITES DE RAYONNEMENT du Tableau 1 conformément à la formule indiquée en 5.2.1 pour les épaisseurs de plomb comprises entre 0,25 mm, 0,35 mm et 0,50 mm

mm Pb	50 kV	60 kV	70 kV	80 kV	90 kV	100kV	110 kV	120 kV	130 kV	140 kV	150 kV
0,25	1,29	1,26	1,23	1,20	1,19	1,21	1,23	1,25	1,27	1,28	1,28
0,35	1,37	1,31	1,27	1,24	1,22	1,24	1,27	1,30	1,32	1,33	1,33
0,50	1,47	1,35	1,32	1,28	1,26	1,29	1,33	1,38	1,41	1,43	1,44

NOTE Les valeurs ont été obtenues à partir l'indice mesuré $B = \frac{F_N}{F_{IB}}$ (voir 5.2.1).

Tableau A.3 – INDICES D'ATTENUATION F_N des épaisseurs de plomb comprises entre 0,125 mm et 7 mm calculés pour les QUALITES DE RAYONNEMENT des Tableaux 1 et 2 conformément à la formule indiquée en 4.5.4

mm Pb	200 kV	250 kV	300 kV	400 kV	662 keV	1 325 keV
0	1,00E+00	1,00E+00	1,00E+00	1,00E+00	1,00E+00	1,00E+00
0,125	1,62E+00	1,44E+00	1,32E+00	1,20E+00	1,02E+00	1,01E+00
0,25	2,49E+00	1,97E+00	1,68E+00	1,41E+00	1,03E+00	1,02E+00
0,35	3,41E+00	2,48E+00	1,99E+00	1,58E+00	1,04E+00	1,02E+00
0,5	5,27E+00	3,38E+00	2,51E+00	1,85E+00	1,06E+00	1,03E+00
1	1,81E+01	7,95E+00	4,78E+00	2,84E+00	1,13E+00	1,07E+00
1,5	5,11E+01	1,61E+01	8,12E+00	4,06E+00	1,21E+00	1,10E+00
2	1,30E+02	3,02E+01	1,30E+01	5,57E+00	1,28E+00	1,14E+00
2,5	3,11E+02	5,37E+01	2,00E+01	7,46E+00	1,37E+00	1,18E+00
3	7,06E+02	9,26E+01	3,01E+01	9,79E+00	1,46E+00	1,22E+00
3,5	1,55E+03	1,56E+02	4,44E+01	1,27E+01	1,55E+00	1,26E+00
4	3,31E+03	2,57E+02	6,44E+01	1,63E+01	1,65E+00	1,31E+00
4,5	6,94E+03	4,17E+02	9,23E+01	2,06E+01	1,75E+00	1,35E+00
5	1,43E+04	6,71E+02	1,31E+02	2,60E+01	1,87E+00	1,40E+00
5,5	2,91E+04	1,07E+03	1,85E+02	3,26E+01	1,99E+00	1,44E+00
6	5,84E+04	1,68E+03	2,58E+02	4,06E+01	2,12E+00	1,49E+00
6,5	1,16E+05	2,63E+03	3,58E+02	5,03E+01	2,25E+00	1,54E+00
7	2,30E+05	4,09E+03	4,95E+02	6,22E+01	2,40E+00	1,59E+00

Radiation Protection (Lead Sheet)

Tableau A.4 – Premières COUCHES DE DEMI-ATTENUATION en mm d'aluminium des QUALITES DE RAYONNEMENT du Tableau 1 en fonction des filtres en plomb supplémentaires d'épaisseurs différentes dans la plage comprise entre 0,125 mm et 2 mm

mm Pb	30 kV	40 kV	50 kV	60 kV	70 kV	80 kV	90 kV	100 kV	110 kV	120 kV	130 kV	140 kV	150 kV
0	1,0	1,4	1,8	2,1	2,4	2,8	3,1	3,4	3,8	4,1	4,5	4,8	5,2
0,125	1,8	3,0	4,2	5,3	6,3	7,2	7,9	8,4	8,9	9,2	9,6	10,0	10,3
0,25	2,0	3,5	5,1	6,4	7,6	8,6	9,4	9,9	10,2	10,5	10,8	11,1	11,5
0,35	2,0	3,7	5,4	6,9	8,2	9,3	10,1	10,5	10,7	11,0	11,3	11,6	12,0
0,5	2,1	3,9	5,8	7,4	8,8	9,9	10,7	11,1	11,3	11,5	11,7	12,1	12,5
1	2,4	4,2	6,3	8,1	9,7	10,9	11,8	12,1	12,2	12,3	12,5	12,8	13,3
1,5	2,5	4,4	6,5	8,4	10,1	11,3	12,4	12,6	12,7	12,7	12,8	13,1	13,6
2	2,6	4,5	6,6	8,6	10,3	11,6	12,7	12,9	12,9	13,0	13,0	13,2	13,8

福泉工程有限公司
FOOK TSUEN ENGINEERING LIMITED
E-mail: info@fooktsuen.com Tel : 3998-3721 Fax : 3998-3723
Flat I, 12/F, Block 2, Kingswin Industrial Building, 32-40 Lei Muk Road, Kwai Chung, N.T.

Radiation Protection (Lead Sheet)

Tableau A.5 – Premières COUCHES DE DEMI-ATTENUATION en mm de cuivre des QUALITES DE RAYONNEMENT du Tableau 1 en fonction des filtres en plomb supplémentaires d'épaisseurs différentes dans la plage comprise entre 0,125 mm et 4 mm

mm Pb	200 kV	250 kV	300 kV	400 kV
0	1,6	2,5	3,4	4,5
0,125	1,8	2,8	3,7	4,9
0,25	2,0	3,1	4,0	5,1
0,35	2,2	3,3	4,2	5,3
0,5	2,4	3,6	4,5	5,5
1	3,0	4,2	5,0	6,0
1,5	3,4	4,6	5,3	6,3
2	3,7	4,9	5,5	6,5
2,5	3,9	5,0	5,7	6,6
3	4,1	5,1	5,8	6,7
3,5	4,2	5,2	5,9	6,8
4	4,3	5,3	5,9	6,9

Radiation Protection (Lead Sheet)

Bibliographie

IEC 61331-3, *Dispositifs de protection radiologique contre les rayonnements X pour diagnostic médical – Partie 3: Vêtements de protection et dispositifs de protection des gonades*

ISO 4037-1: *Rayonnement X et gamma de référence pour l'étalonnage des dosimètres et des débitmètres, et pour la détermination de leur réponse en fonction de l'énergie des photons – Partie 1: Caractéristiques des rayonnements et méthodes de production*

Index des termes définis utilisés dans la présente Norme internationale

NOTE Dans le présent document, des termes définis soit dans l'IEC 60601-1:2005 et IEC 60601-1:2005/AMD1:2012, l'IEC 60601-1-3:2008 et l'IEC 60601-1-3:2008/AMD1:2013, l'IEC/TR 60788:2004 soit dans la présente Norme internationale ont été utilisés. Ces termes définis peuvent être consultés sur le site web de l'IEC http://std.iec.ch/glossary .

Radiation Protection (Lead Sheet)

INTERNATIONAL
ELECTROTECHNICAL
COMMISSION

3, rue de Varembé
PO Box 131
CH-1211 Geneva 20
Switzerland

Tel: + 41 22 919 02 11
Fax: + 41 22 919 03 00
info@iec.ch
www.iec.ch

Radiation Protection (Lead Sheet)

7. Appendix (GBZ/T147-2002)

福泉工程有限公司
FOOK TSUEN ENGINEERING LIMITED
E-mail: info@fooktsuen.com Tel：3998-3721 Fax：3998-3723
Flat I, 12/F, Block 2, Kingswin Industrial Building, 32-40 Lei Muk Road, Kwai Chung, N.T.

Radiation Protection (Lead Sheet)

ICS 13.100

C57

GBZ

中 华 人 民 共 和 国 国 家 职 业 卫 生 标 准

GBZ/T 147-2002

X 射线防护材料

衰减性能的测定

Determination of attenuation properties

for protective materials against X-rays

2002-04-08 发布 2002-06-01 实施

中华人民共和国卫生部 发布

Radiation Protection (Lead Sheet)

目　　次

E-mail: info@fooktsuen.com　　Tel：3998-3721　　Fax：3998-3723
Flat I, 12/F, Block 2, Kingswin Industrial Building, 32-40 Lei Muk Road, Kwai Chung, N.T.

前　　言

根据《中华人民共和国职业病防治法》制定本标准，原标准 GB 16363-1996 与本标准不一致的，以本标准为准。

本标准保留了原标准 GB 16363-1996 中实际可行的部分内容，即屏蔽性能要求。与此同时，本标准参照采用国际电工委员会标准 IEC 1331-1: 1994《医用诊断 X 射线防护器具　第 1 部分：防护材料衰减性能的测定》，依据该标准增加了宽束测量条件。

本标准由卫生部提出并归口。

本标准起草单位：中国疾病预防控制中心辐射防护与核安全医学所

本标准主要起草人：林志凯、赵兰才、崔广志、金辉、葛淑清

本标准由卫生部负责解释。

福泉工程有限公司 FOOK TSUEN ENGINEERING LIMITED
E-mail: info@fooktsuen.com　Tel：3998-3721　Fax：3998-3723
Flat I, 12/F, Block 2, Kingswin Industrial Building, 32-40 Lei Muk Road, Kwai Chung, N.T.

X 射线防护材料衰减性能的测定　　GBZ/T 147-2002

1　范围

本标准推荐了对 X 射线防护材料衰减性能的测量方法。

本标准适用于 X 射线管电压为（30～400）kV、总过滤为（0.05～3.5 ）mmCu 的 X 射线防护材料。

2　术语和定义

下列术语和定义适用于本标准。

2.1 衰减比　attenuation ratio

核辐射在经防护材料衰减前后的空气比释动能率之比值。

2.2 铅当量　lead equivalent

用铅作为参考物质时以铅的厚度来表示的衰减当量，单位是毫米铅（mmPb）。每单位厚度（mm）防护材料板的铅当量称为比铅当量，比铅当量应该是衰减性能、物理性能和使用性能的最佳结合。

2.3 宽射束　broad beam

辐射量测量中的一种辐射束条件。当辐射束立体角增大时，所测量的辐射量并无明显增加，但存在散射影响。

2.4 窄射束　narrow beam

为了测量理想的辐射量而用立体角尽可能小的辐射束，在此条件下散射辐射的影响趋于最小值，并在必要时保证侧向电子平衡。

3 测定项目与一般要求

3.1 衰减比

所测防护材料应标明衰减比，即核辐射经防护材料衰减后减弱的倍数。

3.2 累积因子 (符号：B)

所测防护材料应标明累积因子 B，即被测物质在所规定的辐照条件下，宽射束中心的相应辐射量值与窄射束中心的相应辐射量值之比。

3.3 衰减当量 (符号：δ)

所测防护材料应标明在规定线质的线束中和规定的测量条件下，与参考物质具有相同衰减程度时被测防护材料所相当的参考物质的厚度（mm）。

3.4 铅当量

出厂的 X 射线防护材料应该标明其标称铅当量和非均匀性，并用 X 射线管电压和总过滤表示线质。

3.5 非均匀性

防护材料衰减当量的非均匀性应不超过±10%。

4　量的测量

本章主要规定了在测定防护材料衰减性能时，应根据宽束测量条件和窄束测量条件测量相关辐射量、几何量，同时对辐射探测器的位置、检验仪器、检验物、线质均提出了要求。

E-mail: info@fooktsuen.com　　Tel：3998-3721　　Fax：3998-3723
Flat I, 12/F, Block 2, Kingswin Industrial Building, 32-40 Lei Muk Road, Kwai Chung, N.T.

根据所测相关辐射量给出防护材料的衰减性能。

4.1 辐射量

在测定衰减性能时，应按照表 1 中的要求测定空气比释动能率。

表 1　应测定的空气比释动能率

衰减性能	符号	空气比释动能率					条文
		$\dot{K}_1$	$\dot{K}_0$	$\dot{K}_e$	$\dot{K}_c$ $\dot{K}_{oc}$	$\dot{K}_s$ $\dot{K}_{1s}$	
衰减比	F	测	测		测	测	5.1
累积因子	B	测		测	测	测	5.2
衰减当量	δ			测			5.3
铅当量	δ_{pb}			测			5.4
非均匀性	V			测			5.5

$\dot{K}_1$是按照第 4.3 条在经过衰减的宽射束中测量的空气比释动能率；

$\dot{K}_0$是按照第 4.3 条在未经过衰减的宽射束中测量的空气比释动能率；

$\dot{K}_e$是按照第 4.4 条在经过衰减的窄射束中测量的空气比释动能率；

$\dot{K}_c$是根据图 1 测定的辐射源与检验物之间宽射束中心处的空气比释动能率；

$\dot{K}_{oc}$是如图 1 所示的经限束系统后，同$\dot{K}_c$点离辐射源相同距离处测定的宽射束外的空气比释动能率；

$\dot{K}_s$是如图 1 所示的初始宽射束投影内、由光阑限制的辐射束外的空气比释动能率；

$\dot{K}_{1s}$是同$\dot{K}_s$点离辐射源相同距离处测定的经衰减的宽射束空气比释动能率。

4.2 几何量

应该按照表 2 中的要求测定示出的几何量。

4.3　宽射束条件下的测量

4.3.1 在宽射束条件下，应该按照图 1 的要求进行测量。

4.3.2 在测量期间，空气比释动能率$\dot{K}_{oc}$应不大于空气比释动能率$\dot{K}_c$的 5%，即：

$$\dot{K}_{oc} \leqslant 0.05 \times \dot{K}_c$$

4.3.3 在测量期间，空气比释动能率$\dot{K}_s$应不大于空气比释动能率$\dot{K}_{1s}$的 1%，即：

$$\dot{K}_s \leqslant 0.01 \times \dot{K}_{1s}$$

福泉工程有限公司 FOOK TSUEN ENGINEERING LIMITED
E-mail: info@fooktsuen.com　Tel：3998-3721　Fax：3998-3723
Flat I, 12/F, Block 2, Kingswin Industrial Building, 32-40 Lei Muk Road, Kwai Chung, N.T.

表 2　应测定的几何量

衰减性能	符号	c	a	b	A	W	条文
衰减比 累积因子	F B	测	测	测	测	测 测	5.1 5.2
衰减当量 铅当量 非均匀性	δ δ_{pb} V					测 测	5.3 5.4 5.5

c 是对测量点 $\dot{K}_e$ 离辐射源的距离（见图 2）偏差的修正因子。按照下式测定c：

$$c = \left(\frac{1500 + a}{1550}\right)^2$$

a 是图 2 所示的窄射束中心从检验物的远侧平面到辐射探测器参考点的距离。a 应不小于截面 A 平方根的 10 倍；
b 是图 1 所示的宽射束中心从检验物的远侧平面到辐射探测器参考点的距离；
A 是图 2 所示的检验物远侧平面处窄射束的截面；
W 是辐射探测器的参考点与任何相邻物或墙壁之间的距离（见图 1 和图 2）。

4.4 窄束条件下的测量
4.4.1 在窄射束条件下，应该按照图 2 的要求进行测量。
4.4.2 在检验物的远侧，辐射束的直径应该为 20 mm±1 mm 。
4.4.3 根据第 6.5.1 条测定均匀度时，在检验物远侧应该将窄射束限制到直径不大于 10 mm 。
4.5 辐射探测器的位置
距离 W 应不小于 700 mm 。

4.5.1 测定衰减比时，应测量有和没有检验物条件下的空气比释动能率 $\dot{K}_1$和 $\dot{K}_0$。从检验物远侧平面到辐射探测器参考点的距离b应为 50 mm±1 mm（见图 1）。

4.5.2 在空气比释动能率 $\dot{K}_e$的测量中，对于累积因子的测量，从检验物的远侧到辐射探测器参考点的距离应不小于截面A平方根的 10 倍。
4.6 检验仪器
4.6.1 检验仪器的辐射探测器，在半球面上对射线入射方向的响应依赖性很小，应忽略不计。
4.6.2 辐射探测器测量管电压为 40 kV－400kV 的 X 射线时，探测器对射线能量的响应依赖性必须不超过±20%。
4.6.3 辐射探测器灵敏体积的直径和长度均应不超过 50 mm。
4.6.4 X 射线高压发生装置应满足实验管电压的要求，其实验管电压的实际值不得低于规定实验管电压的 90%。
4.6.5 标准铅片的化学纯度应为 99.99%，厚度精度为±0.01 mm。

福泉工程有限公司 FOOK TSUEN ENGINEERING LIMITED
E-mail: info@fooktsuen.com　Tel：3998-3721　Fax：3998-3723
Flat I, 12/F, Block 2, Kingswin Industrial Building, 32-40 Lei Muk Road, Kwai Chung, N.T.

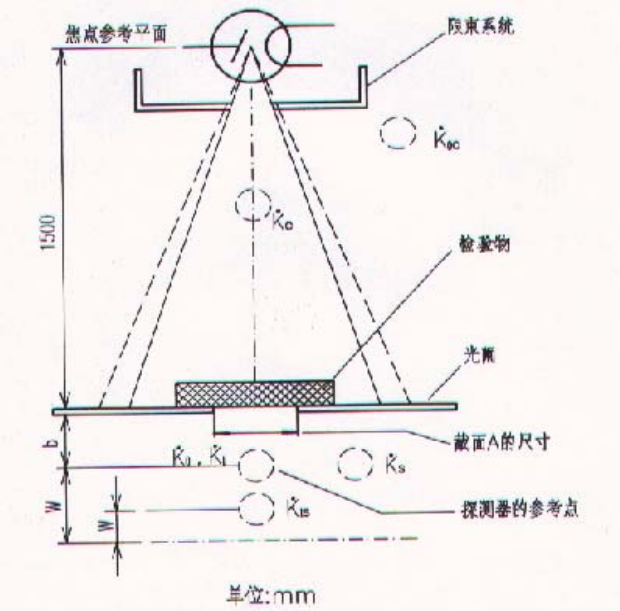

图1 宽射束测量条件示意图

4.6.6 过滤条件

用于管电压在 120kV(包括 120kV)以下的 X 射线防护材料,其实验管电压为 80～120kV,总过滤为 2.5 mmAl。用于管电压在 120kV 以上的 X 射线防护材料,按最常用的管电压进行,其总过滤按表 3 的规定。

表 3 标准化线质

X 线管电压 kV*	总过滤 mm Cu
30	0.05
50	0.05
80	0.15
100	0.25**
120	0.25**
150	0.7
200	1.2
250	1.8
300	2.5
400	3.5
*百分波纹率不超过 4%; **可用 2.5 mmAl 代替	

4.7 检验物

4.7.1 在宽射束测量条件下,检验物必须是受检材料板,其尺寸至少为 500 mm×500 mm 。

4.7.2 在窄射束测量条件下,检验物必须是受检材料板,其尺寸至少为 100 mm×100 mm 。

福泉工程有限公司 FOOK TSUEN ENGINEERING LIMITED
E-mail: info@fooktsuen.com Tel：3998-3721 Fax：3998-3723
Flat I, 12/F, Block 2, Kingswin Industrial Building, 32-40 Lei Muk Road, Kwai Chung, N.T.

4.7.3 用于测定衰减率时，各种厚度的检验物可以通过几层相同厚度或不同厚度的材料叠加而获得。

4.8 线质

应该根据表 3 中给出的一种或多种线质来测定衰减性能。

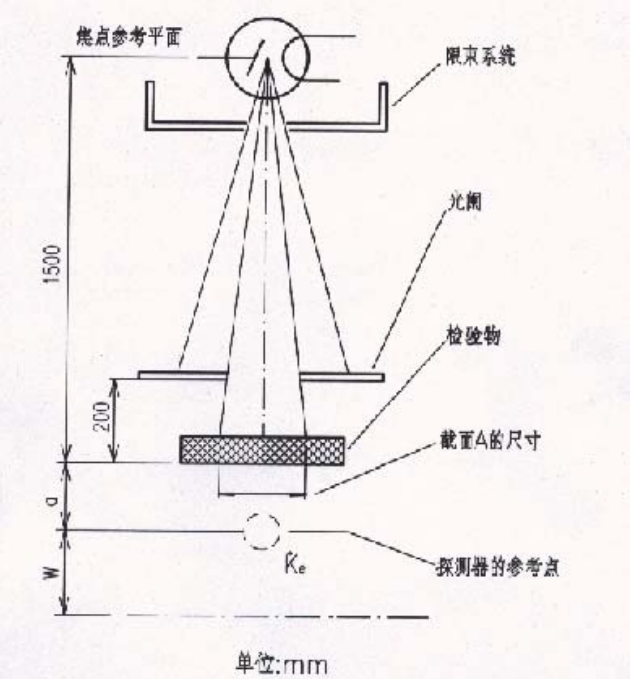

单位:mm

图2 窄射束测量条件示意图

5 衰减性能的测定

在所有测量期间，必须监测辐射束空气比释动能率的恒定性。如果空气比释动能率的涨落超过平均值的 5%，则必须对测量结果进行修正。

5.1 衰减比

5.1.1 必须按照下述公式测定衰减比 F：

5.1.2 应该用数值表示衰减比，并用 X 射线管电压和总过滤表示线质（见第 6 条）。

$$F = \frac{\dot{K}_0}{\dot{K}_1}$$

E-mail: info@fooktsuen.com Tel：3998-3721 Fax：3998-3723
Flat I, 12/F, Block 2, Kingswin Industrial Building, 32-40 Lei Muk Road, Kwai Chung, N.T.

5.2 累积因子

5.2.1 应该按照下述公式测定累积因子 B：

$$B = \frac{\dot{K}_i}{c\,\dot{K}_e}$$

式中，c是对测量点 $\dot{K}_e$ 离辐射源的距离偏差的修正因子。

5.2.2 累积因子应该用其数值表示，并用 X 射线管电压和总过滤表示线质（见 第 6 条）。

5.3 衰减当量

5.3.1 通过对受检材料 $\dot{K}_e$ 的测量，并同产生同样 $\dot{K}_e$ 值的一层参考材料的厚度相比较来测定衰减当量。

5.3.2 必须以参考材料的厚度（mm）表示衰减当量，同时一并给出化学符号或其它参考材料的标识，并用 X 射线管电压和总过滤表示线质（见第 6 条）。

5.4 铅当量

5.4.1 当参考材料为铅时，测量得到的衰减当量就是铅当量。

5.5 非均匀性

5.5.1 应该在第 4.4.3 和 4.6.3 条以及相应衰减值 δ_i 条件下，由检验物区域上获得的测量值 $\dot{K}_e$ 来测定防护材料的非均匀性。

5.5.2 应测定下列条件下的 δ_i 值：

a) 在 5 到 10 个有代表性的部位测量；

b) 在整个检验物区域有代表性的方向上连续测量。

5.5.3 应该按照衰减当量单次测量值 δ_i 偏离其平均值 δ 的最大偏差，来表示防护材料的非均匀性：

5.5.4 应该用相同的单位与衰减当量来标明非均匀性的允许偏差，

$$\bar{\delta} = \frac{1}{n}\sum_{i=1}^{n}\delta_i$$

$$V = \left|\bar{\delta} - \delta_i\right|_{最大}$$

例如：

3 mm±0.2 mm Pb　　100 kV　　0.25　mmCu

(见第 6 章)

6. 测定结果的说明

6.1 如果按本标准测定的衰减性能符合本标准，则应在检验文件上予以说明，例如：

衰减比　　2×10^2：　　200 kV　1.2 mmCu ；

累积因子　　1.4 ：　　150 kV　0.7 mmCu ；

衰减当量　　2 mm Fe：　100kV　0.25 mmCu ；

铅当量　　1 mm Pb　　120kV　2.5 mmAl。

衰减当量及非均匀性　2 mm±0.1 mm Fe　　100 kV　　0.25 mmCu

6.2　X 射线防护材料的适当位置应有如下标志：

a)　产品名称；

----The End ---

E-mail: info@fooktsuen.com　　Tel：3998-3721　　Fax：3998-3723
Flat I, 12/F, Block 2, Kingswin Industrial Building, 32-40 Lei Muk Road, Kwai Chung, N.T.

Radiation Protection (Lead Glass Serial)

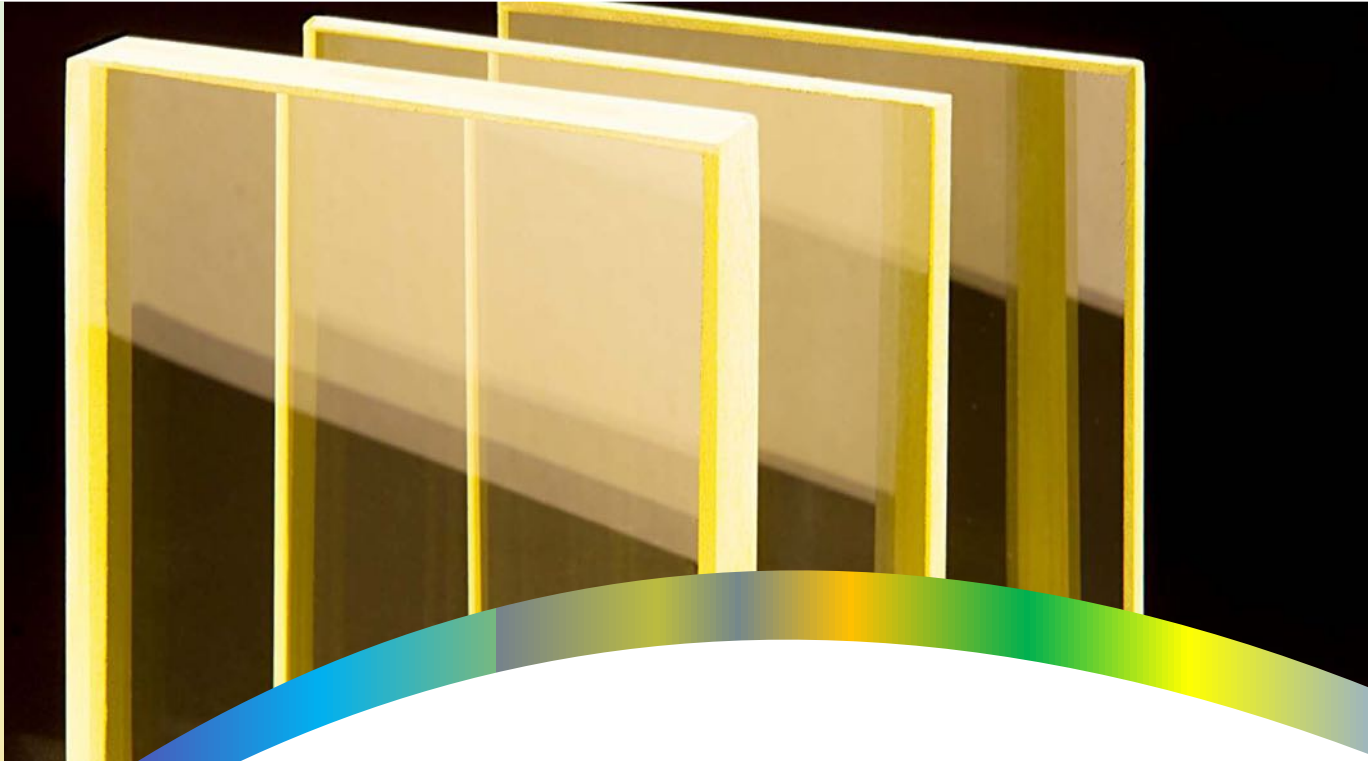

福 泉 工 程 有 限 公 司
FOOK TSUEN ENGINEERING LIMITED

Radiation Protection Serial

Medical Lead Glass Window with Switchable Smart Film

福泉工程有限公司
FOOK TSUEN ENGINEERING LIMITED

E-mail: info@fooktsuen.com Tel : +852 3998 3721 Fax : +852 3998 3723
Flat I, 12/F, Block 2, Kingswin Industrial Building, 32-40 Lei Muk Road, Kwai Chung, N.T.

Our Company

The company founder was a labor in the construction industry, in the transitioning of form a labor to a business, the founder got into every single tiny detail of installation, production, materializing, manufacturing etc. However, the business vital is the simple and valuable business philosophy as:

- *Faith*
- *Delivering the needs of customer*
- *Win-win cooperation*
- *Sustainability*

Fook Tsuen Engineering Ltd was established since 2006, over the decade, we were anticipated much of public and private construction projects in Hong Kong. The radiation protection and hospital project are one of our signature business, and the main job reference is summarized as table in next page.

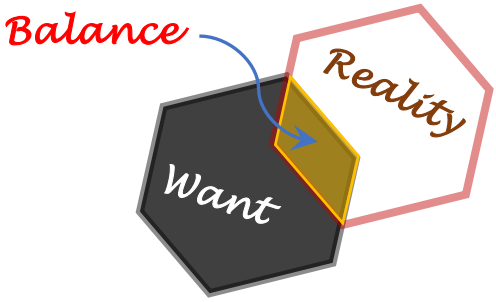

E-mail: info@fooktsuen.com Tel：3998-3721 Fax：3998-3723
Flat I, 12/F, Block 2, Kingswin Industrial Building, 32-40 Lei Muk Road, Kwai Chung, N.T.

Radiation Protection (Lead Glass Serial)

Hospital and Radiation Shielding Job Reference

Year	Organization	Project Description
2014	Canossa Hospital	X-ray room renovation
2015 - 2106	Tin Shui Wai Hospital	Radiation protection shielding
2016 - 2018	Hong Kong Children's Hospital (Kai Tak)	Radiation protection shielding with lead lined door
2018	Hong Kong Adventist Hospital	Operation Theatre Renovation with radiation shielding
2018 - 2019	Housing Authority (Shek Kip Mei Estate)	Dental Clinic – radiation shielding with lead lined door
2018 - 2020	CUHK Medical Centre	Radiation protection shielding with lead glass window
2019 - 2021	Museum Plus (M+)	Radiography room - Radiation protection shielding with lead lined door
2020-2021	Castle Peak Hospital Dental Clinic	X-ray room - radiation protection door
2022 - 2023	SPCA – Animal Welfare and Education Centre in Tsing Yi	Radiation protection shielding with lead lined door & lead glass window
2021 - 2023	Kwong Wah Hospital Redevelopment (Phase I)	Radiation protection shielding with lead lined door & lead glass window

E-mail: info@fooktsuen.com Tel：3998-3721 Fax：3998-3723
Flat I, 12/F, Block 2, Kingswin Industrial Building, 32-40 Lei Muk Road, Kwai Chung, N.T.

Radiation Protection (Lead Glass Serial)

Switchable Lead Glass Window

Radiation Protection Serial

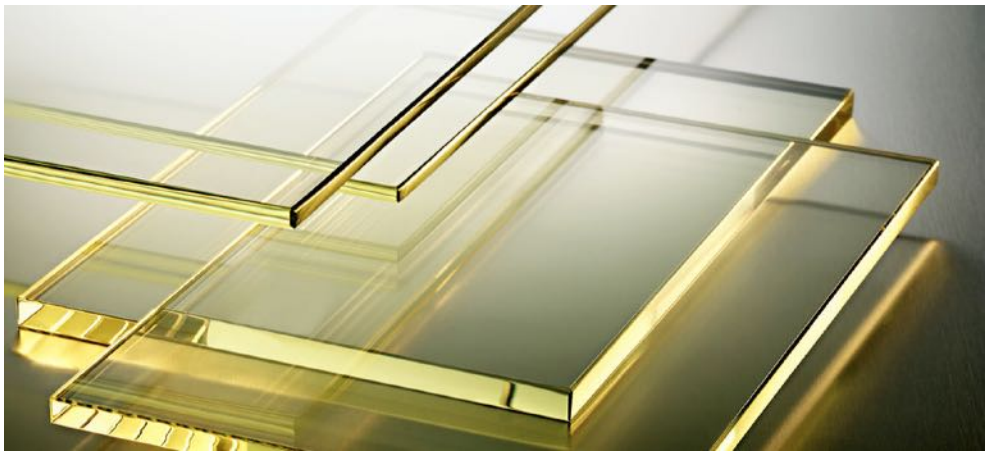

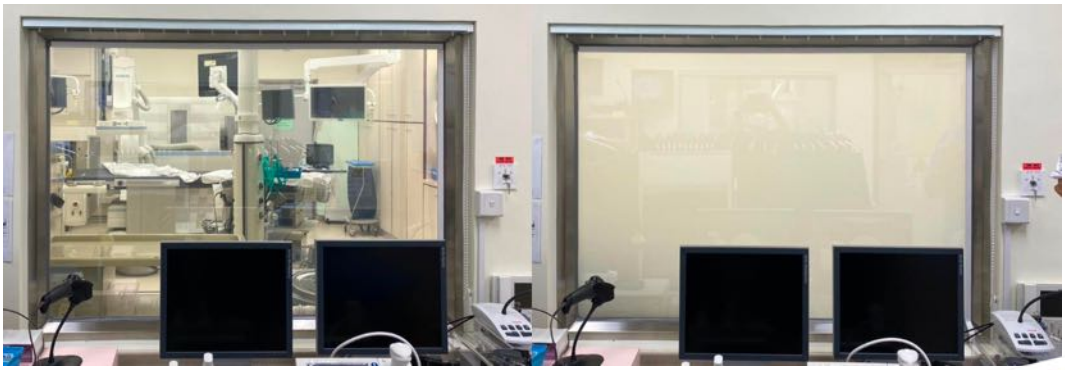

E-mail: info@fooktsuen.com Tel：3998-3721 Fax：3998-3723
Flat I, 12/F, Block 2, Kingswin Industrial Building, 32-40 Lei Muk Road, Kwai Chung, N.T.

Radiation Protection (Lead Glass Serial)

Table of Content

E-mail: info@fooktsuen.com Tel：3998-3721 Fax：3998-3723
Flat I, 12/F, Block 2, Kingswin Industrial Building, 32-40 Lei Muk Road, Kwai Chung, N.T.

1. Lead Glass Material Information

1.1 Manufacturer

Shanghai Shenwang Radiation Protective Equipment Co., Ltd. is the manufacturer of lead glass and a series of radiation protective equipment and continuously providing high-quality service to customers more than 15 years.

福泉工程有限公司
FOOK TSUEN ENGINEERING LIMITED

E-mail: info@fooktsuen.com Tel：3998-3721 Fax：3998-3723
Flat I, 12/F, Block 2, Kingswin Industrial Building, 32-40 Lei Muk Road, Kwai Chung, N.T.

Radiation Protection (Lead Glass Serial)

Photo record

福泉工程有限公司
FOOK TSUEN ENGINEERING LIMITED
E-mail: info@fooktsuen.com Tel：3998-3721 Fax：3998-3723
Flat I, 12/F, Block 2, Kingswin Industrial Building, 32-40 Lei Muk Road, Kwai Chung, N.T.

Radiation Protection (Lead Glass Serial)

福泉工程有限公司
FOOK TSUEN ENGINEERING LIMITED

E-mail: info@fooktsuen.com Tel：3998-3721 Fax：3998-3723
Flat I, 12/F, Block 2, Kingswin Industrial Building, 32-40 Lei Muk Road, Kwai Chung, N.T.

Radiation Protection (Lead Glass Serial)

E-mail: info@fooktsuen.com Tel：3998-3721 Fax：3998-3723
Flat I, 12/F, Block 2, Kingswin Industrial Building, 32-40 Lei Muk Road, Kwai Chung, N.T.

Radiation Protection (Lead Glass Serial)

福泉工程有限公司
FOOK TSUEN ENGINEERING LIMITED

E-mail: info@fooktsuen.com Tel：3998-3721 Fax：3998-3723
Flat I, 12/F, Block 2, Kingswin Industrial Building, 32-40 Lei Muk Road, Kwai Chung, N.T.

1.2 International Standard

Comply to the international standards of IEC 6133-1, ISO 9001:2015, ISO 14001:2015, ISO 45001:2018, GBZ/T147-2002, GB/T 19001-2016, GB/T 24001/2016, GB/T 45001-2020.

The information of major international standard is showing in the Appendix 7 &8.

Note:
The IEC-1331-1 is replaced by IEC-61331-1 as shown.

IEC-1331-1 › Complete Document History
Protective Devices Against Diagnostic Medical X-Radiation - Part 1: Determination of Attenuation Properties of Materials.

How to Order
Standards We Provide
Updating, Reporting, Audits
Copyright Compliance

Obsolete Revision Information:

REPLACED BY IEC-61331-1 - WITHDRAWN IN 2014 - May 1, 2014
1ST EDITION - Part 1: Determination of Attenuation Properties of Materials - Oct. 1, 1994

2. Switchable Smart Film Information

UMEDCO (FAR EAST) LIMITED

Switchable Smart Film

The **Switchable Smart Film** is suitable for installing on the glass panel for different departments in hospital, and also workable for lead glass in Radiology modalities.

The Switchable Smart Film replaces traditional window curtains with electronic means, to provide privacy to patients when needed. And at the same time remove the infection control concern when using curtains.

3. Appendix (Job Reference)

E-mail: info@fooktsuen.com Tel：3998-3721 Fax：3998-3723
Flat I, 12/F, Block 2, Kingswin Industrial Building, 32-40 Lei Muk Road, Kwai Chung, N.T.

Radiation Protection (Lead Glass Serial)

Hong Kong Main Job Reference	
1	Kwong Wah Hospital Redevelopment Phase 1
2	SPCA (Animal Welfare Centre – Tsing Yi)
3	Hong Kong Children Hospital (Kai Tak)
4	Alice Ho Miu Ling Nethersole Hospital
5	Haven of Hope Hospital
6	Kwong Wah Hospital
7	North District Hospital
8	Pamela Youde Nethersole Eastern Hospital
9	Pok Oi Hospital
10	Prince of Wales Hospital
11	Princess Margaret Hospital
12	Queen Elizabeth Hospital
13	Queen Mary Hospital
14	Ruttonjee Hospital
15	The Duchess of Kent Children's Hospital
16	Tin Shui Wai Hospital
17	Tseung Kwan O Hospital
18	Tuen Mun Hospital
19	United Christian Hospital
20	Wong Tai Sin Hospital
21	Yan Chai Hospital

Radiation Protection (Lead Glass Serial)

上海神网辐射防护器材有限公司
Shanghai Radiation Protective Equipment Co., Ltd.

Job Reference	
医院名称	工程项目名称
上海阳光康复中心	拍片机房
香港儿童医院	拍片机房
虹口区精神卫生中心	X 线机房
昆山市第四人民医院	X 线机房
上海市浦东新区疾病预防控制中心	透视机房
南京 94654 部队医院	透视，拍片机房
上海奉贤区海湾医院	透视，拍片机房
浙江省杭州消防医院	拍片机房
浙江省杭州拱墅区医院	拍片机房
上海光华医院	拍片机房
上海静安区疾控中心	透视机房
江苏海宁瑞金医院	拍片机房
闵行区精神卫生中心	X 线机房
上海复旦大学附属儿科医院	CT，DR，ECT 机房，拍片机
上海静安区闸北中心医院	DR、CT、钼靶机房、口腔 CT
上海江川医院	透视，拍片机房
上海奉贤中心医院	CT，DR 机房
上海新华医院	CT，DR，震波机房
医院名称	工程项目名称
公安部第三研究所	辐射防护检测机房
长征医院	CT，DR，拍片，胃肠机房
虹口区精神卫生中心	DR 机房
徐汇区妇幼保健院	X 光拍片机房
昆山虹桥医院	X 光拍片机房
黄浦区中西医结合医院	DR 机房
上海市中山医院放射科	拍片机房，不锈钢电动移门

Radiation Protection (Lead Glass Serial)

上海神网辐射防护器材有限公司
Shanghai Radiation Protective Equipment Co., Ltd.

上海华东医院	拍片机房
上海东方医院	拍片机房
上海曙光医院	拍片机房
江苏泰州出入境检验检疫局	透视机房
上海市静安区中心医院	拍片机房
上海市第六人民医院	CT，DR 机房
上海第二军医大学附属长海医院	CT，DR 机房
上海市闵行区中心医院	拍片机房
上海市医科大学附属金山医院	拍片机房
上海奉贤海湾精神卫生中心	拍片机房
上海儿童医学中心	CT、胃肠机房
上海圣欣儿科门诊部	DR 机房

4. Appendix (Certification)

E-mail: info@fooktsuen.com Tel：3998-3721 Fax：3998-3723
Flat I, 12/F, Block 2, Kingswin Industrial Building, 32-40 Lei Muk Road, Kwai Chung, N.T.

Radiation Protection (Lead Glass Serial)

QUALITY MANAGEMENT SYSTEM CERTIFICATE

Registration No. 0350120Q31042R0S

This is to certify that the quality management system of

Shanghai Shenwang Radiation Protective Equipment Co., Ltd.

Nanmei Lane, Weixing Village, Huacao Town, Minhang District, 201107

Social Credit Code: 913101127472906754

is in conformity with

GB/T 19001-2016 / ISO 9001:2015 Standard

This certificate is valid to the following product(s)

Manufacture and service of lead glass products (Site Covered: No. 18, Zexin Avenue, Xingou Town, Funing County, Yancheng City, Jiangsu Province/Room B, 2/F, Building 4, Lane 88, Minbei Road, Minhang District, Shanghai).

Date of issue: November 13, 2020
Date of expiry at most: November 12, 2023

Representative: *WangHonglin*

XINGYUAN CERTIFICATION CENTRE CO., LTD. (XQCC)
(7FL, Tower C, Jiahua Plaza, No. 9 Shangdi 3 St., Haidian, Beijing)

中国认可
国际互认
管理体系
MANAGEMENT SYSTEM
CNAS C035-M

NOTE: This certificate shall be maintained by regular surveillance audit.
The validity of the certificate can be verified by scanning QR code.
The information of the certificate can be available in http://www.cnca.gov.cn, the website of CNCA, and in our website http://www.xqcc.com.cn.

Radiation Protection (Lead Glass Serial)

ENVIRONMENTAL MANAGEMENT SYSTEM CERTIFICATE

Registration No. 0350120E20626R0S

This is to certify that the environmental management system of

Shanghai Shenwang Radiation Protective Equipment Co., Ltd.

Nanmei Lane, Weixing Village, Huacao Town, Minhang District, 201107

Social Credit Code: 913101127472906754

is in conformity with

GB/T 24001-2016 / ISO 14001:2015 Standard

This certificate is valid to

Manufacture and service of lead glass products (Site Covered: No. 18, Zexin Avenue, Xingou Town, Funing County, Yancheng City, Jiangsu Province/Room B, 2/F, Building 4, Lane 88, Minbei Road, Minhang District, Shanghai).

Date of issue: November 13, 2020
Date of expiry at most: November 12, 2023

Representative: *WangHonglin*

XINGYUAN CERTIFICATION CENTRE CO., LTD. (XQCC)
(7FL, Tower C, Jiahua Plaza, No. 9 Shangdi 3 St., Haidian, Beijing)

中国认可
国际互认
管理体系
MANAGEMENT SYSTEM
CNAS C035-M

NOTE: This certificate shall be maintained by regular surveillance audit.
The validity of the certificate can be verified by scanning QR code.
The information of the certificate can be available in http://www.cnca.gov.cn, the website of CNCA, and in our website http://www.xqcc.com.cn.

OCCUPATIONAL HEALTH AND SAFETY MANAGEMENT SYSTEM CERTIFICATE

Registration No. 0350120S30602R0S

This is to certify that the occupational health and safety management system of

Shanghai Shenwang Radiation Protective Equipment Co., Ltd.

Nanmei Lane, Weixing Village, Huacao Town, Minhang District, 201107

Social Credit Code: 913101127472906754

is in conformity with

GB/T 45001-2020 / ISO 45001:2018 Standard

This certificate is valid to

Manufacture and service of lead glass products (Site Covered: No. 18, Zexin Avenue, Xingou Town, Funing County, Yancheng City, Jiangsu Province/Room B, 2/F, Building 4, Lane 88, Minbei Road, Minhang District, Shanghai).

Date of issue: November 13, 2020
Date of expiry at most: November 12, 2023

Representative: *WangHonglin*

XINGYUAN CERTIFICATION CENTRE CO., LTD. (XQCC)
(7FL, Tower C, Xinghong Plaza, No. 9 Shangdi 3 St., Haidian, Beijing)

CNAS
中国认可
管理体系
MANAGEMENT SYSTEM
CNAS C035-M

NOTE: This certificate shall be maintained by regular surveillance audit.
The validity of the certificate can be verified by scanning QR code.
The information of the certificate can be available in http://www.cnca.gov.cn, the website of CNCA, and in our website http://www.xqcc.com.cn.

Radiation Protection (Lead Glass Serial)

TÜVRheinland

CE Technical Documentation Review Report

Manufacturer:	**Shanghai Shenwang Radiation Protective Equipment Co., Ltd.** No.149, Lane 1510, Jidi Road, Huacao Town Minhang District, Shanghai, PRC
Report Number:	15097024 001
Examination intent:	Examination the completeness of the Technical Documentation according to the requirements of the Medical Devices Directive 93/42/EEC Annex VII
Product(s):	Radiation Shielding Material for medical use: Lead Sheets Leaded Glass Leaded Goggles Lead Aprons
Type(s)/Model(s):	Lead Sheets: custom-made sizes Leaded Glass: ZF2, ZF3, ZF6, ZF12 Leaded Goggles for eye radiation shield Lead Aprons: S M L
Classification:	Class I, rule 1 (according to manufacturer's declaration)
Review result:	During the examination of the provided Technical Documentation (No.: SW/TF-001, Rev A/0, 2016-05-29), no Non-compliance according to the requirements of the Medical Devices Directive 93/42/EEC Annex VII was detected.

TÜV Rheinland (Shanghai) Co., Ltd.

Shanghai, 2016-08-24

Daniel ZHU
Lead Auditor, Product Assessor
Medical Device Services

Products · Quality Assurance · TÜVRheinland · Approved

Rev. 05, 2013-12-17

TÜV Rheinland (Shanghai) Co., Ltd.
Unternehmensgruppe
TÜV Rheinland Group

TÜV Building, No.177, Lane 777, West Guangzhong Road, Zhabei District, Shanghai 200072, P.R.China

Tel (86/21) 6108 1188
Fax (86/21) 6108 1199

e-mail service-gc@tuv.com
Internet http://www.tuv.com

Centre for Radiation, Chemical and Environmental Hazards

Health Protection Agency

Radiation Metrology Group, Radiation Protection Division
Health Protection Agency, Chilton, Didcot, Oxfordshire, OX11 0RQ
E-mail: rad.met@hpa.org.uk Web: www.hpa.org.uk/radiation
Tel: +44(0)1235 831 600 Fax: +44(0)1235 822 818

Radiological Protection Instrument
Certificate of Calibration
No. 49096

A. Name and address of user:

Corning SAS
Rue Saint Laurent BP90094 Bagneaux sur Loing
77792 Nemours CEDEX

B. Conditions:

Distance from tube target to sample:	50cm
Distance from tube target to detector:	150cm
Ionisation chamber used:	Exradin A6
Electrometer used:	Ionex Dosemaster 2590B
X-ray potential:	60kV, 80kV, 100kV, 110kV, 150kV, 200kV, 250kV and 300kV
Total beam filtration:	Equivalent to 0.25mm Cu at 100 kV And 0.7mm Cu at 150 kV
Samples:	Lead glass thickness of 3.5mm, 5.0mm, 5.5mm, 7mm, 8mm, 8.5mm, 9mm, 10mm, 11mm, 12mm, 13mm, 14mm, 14.5mm, 16mm, 18mm and 25mm.

C. Traceability:

All the equipment associated with the measurements performed in this report has calibrations directly traceable to National Standards via the National Physical Laboratory or UKAS Accredited calibration facilities. All tests have been carried out in accordance with IEC 61331-1:2002 Protective devices against diagnostic medical X-radiation. Determination of attenuation properties of materials, BS EN 61331-2:2002 Protective devices against diagnostic medical X-radiation. Protective glass plates and BS 4031:1996 Specification for X-ray protective lead glasses. In addition the method used is in accordance with JIS Z 4501: Testing method of Lead Equivalent for X – ray protective Devices:1998 and the results obtained satisfy (as far as the radiological tests are concerned) JIS R 3701:Lead glass for X-ray protection:1990.

D. Uncertainties:

The uncertainties stated in this certificate are expressed at the 95% confidence level.

Name of persons performing the test: Mrs J C McClure

Signature of qualified person: Mr D R McClure

Date: 12th May 2008

Certificate of calibration No. 49096

E. Results:

The estimated uncertainties in these values are ±3% (based on combined errors) quoted at the 95% confidence limit.

The samples Lead equivalence was derived using a four point La Grange Interpolation routine applied to data obtained from known thicknesses of Lead and from each sample.

Sample	Lead Equivalent (mm) at X-ray tube potentials							
	300 kV	250 kV	200 kV	150 kV	110 kV	100 kV	80 kV	60 kV
3.5mm Glass	1.00	0.99	1.01	1.14	1.21	1.25	1.24	1.18
5.0mm Glass	1.30	1.29	1.32	1.51	1.68	1.68	1.68	1.67
5.5mm Glass	1.33	1.32	1.35	1.52	1.71	1.71	1.71	1.85
7.0mm Glass	1.76	1.74	1.76	2.03	2.28	2.25	2.26	2.89
8.0mm Glass	2.09	2.07	2.06	2.42	2.71	2.68	2.69	N/A
8.5mm Glass	2.14	2.11	2.12	2.58	2.84	2.77	2.80	N/A
9.0mm Glass	2.33	2.35	2.27	2.88	2.96	2.94	2.95	N/A
10.0mm Glass	2.62	2.57	2.54	2.98	3.34	3.32	3.33	N/A
11.0mm Glass	2.80	2.71	2.69	3.24	3.59	3.54	N/A	N/A
12.0mm Glass	3.26	3.08	3.03	3.61	4.00	4.02	N/A	N/A
13.0mm Glass	3.28	3.20	3.13	3.73	4.14	4.18	N/A	N/A
14.0mm Glass	4.05	3.55	3.51	4.21	4.66	4.44	N/A	N/A
14.5mm Glass	4.22	3.69	3.61	4.30	4.71	N/A	N/A	N/A
16mm Glass	4.34	4.11	4.03	4.81	N/A	N/A	N/A	N/A
18mm Glass	4.66	4.52	4.42	5.38	N/A	N/A	N/A	N/A
25mm Glass	6.51	6.30	6.12	N/A	N/A	N/A	N/A	N/A

N/A = Not applicable. X-ray transmission below level of detection.

福泉工程有限公司
FOOK TSUEN ENGINEERING LIMITED

E-mail: info@fooktsuen.com Tel：3998-3721 Fax：3998-3723
Flat I, 12/F, Block 2, Kingswin Industrial Building, 32-40 Lei Muk Road, Kwai Chung, N.T.

Certificate of calibration No. 49096

The minimum Lead equivalent thickness was determined for a range of glass thicknesses; this was determined by performing linear regression on the above data.
The estimated uncertainties in these values are ±3% (based on combined errors) quoted at the 95% confidence limit, with the exception of the equivalence's quoted at 60 kV which have an associated uncertainty of ±10% due to the fact that only two points were available for the calculation.

Thickness range (mm)	Minimum Lead Equivalent (mm) at X-ray tube potentials							
	300 kV	250 kV	200 kV	150 kV	110 kV	100 kV	80 kV	60 kV
3.5 – 5.0	1.00	0.99	1.01	1.14	1.21	1.25	1.24	1.18
5.0 – 6.5	1.30	1.29	1.32	1.51	1.68	1.68	1.68	1.67
7.0 – 8.5	1.76	1.74	1.76	2.03	2.28	2.25	2.26	2.89
8.5 – 10.0	2.14	2.11	2.12	2.58	2.84	2.77	2.80	N/A
10.0 – 12.0	2.62	2.57	2.54	2.98	3.34	3.32	3.33	N/A
11.0 – 13.0	2.80	2.71	2.69	3.24	3.59	3.54	N/A	N/A
14.0 – 16.0	4.05	3.55	3.51	4.21	4.66	4.44	N/A	N/A
16.0 – 18.0	4.34	4.11	4.03	4.81	N/A	N/A	N/A	N/A
18.0 – 25.0	4.66	4.52	4.42	5.38	N/A	N/A	N/A	N/A
Greater than 25.0	6.51	6.30	6.12	N/A	N/A	N/A	N/A	N/A

N/A = Not applicable. X-ray transmission below level of detection.

E-mail: info@fooktsuen.com Tel：3998-3721 Fax：3998-3723
Flat I, 12/F, Block 2, Kingswin Industrial Building, 32-40 Lei Muk Road, Kwai Chung, N.T.

Shanghai Shenwang Radiation Protective Equipment Co., Ltd.
上海神网辐射防护器材有限公司

DATA SHEET

ZF2 X-RADIATION PROTECTIVE LEAD GLASS

OPTICAL PROPERTIES

Refractive index Nd	1.67268
Transmission % 550mm through 5mm path	>80%

CHEMICAL PROPERTIES

Lead Oxide Content (pb)	56%
SiO2	42%

MECHANICAL PROPERTIES

Specific gravity (g/cm^3)	4.12
Chemical stability (moisture resistant)	1
Chemical stability (acid proof)	1a
Light absorption level	1-3

上海神网辐射防护器材有限公司

福泉工程有限公司 FOOK TSUEN ENGINEERING LIMITED

Shanghai Shenwang Radiation Protective Equipment Co., Ltd.
上海神网辐射防护器材有限公司

DATA SHEET

ZF6 X-RADIATION PROTECTIVE LEAD GLASS

OPTICAL PROPERTIES

Refractive index Nd	1.75523
Transmission % 550mm through 5mm path	>80%

CHEMICAL PROPERTIES

Lead Oxide Content (pb)	67%
SiO2	30%

MECHANICAL PROPERTIES

Specific gravity (g/cm^3)	4.77
Chemical stability (moisture resistant)	1
Chemical stability (acid proof)	2a
Light absorption level	1-3

----- THE END ----

福 泉 工 程 有 限 公 司
FOOK TSUEN ENGINEERING LIMITED

Radiation Protection Serial

Lead Lined Door

with

Lead Glass Panel

E-mail: info@fooktsuen.com
Tel : +852 3998 3721 Fax : +852 3998 3723
Flat I, 12/F, Block 2, Kingswin Industrial Building,
32-40 Lei Muk Road, Kwai Chung, N.T.

Our Company

The company founder was a labor in the construction industry, in the transitioning of form a labor to a business, the founder got into every single tiny detail of installation, production, materializing, manufacturing etc. However, the business vital is the simple and valuable business philosophy as:

- *Faith*
- *Delivering the needs of customer*
- *Win-win cooperation*
- *Sustainability*

Fook Tsuen Engineering Ltd was established since 2006, over the decade, we were anticipated much of public and private construction projects in Hong Kong. The radiation protection and hospital project are one of our signature business, and the main job reference is summarized as table in next page.

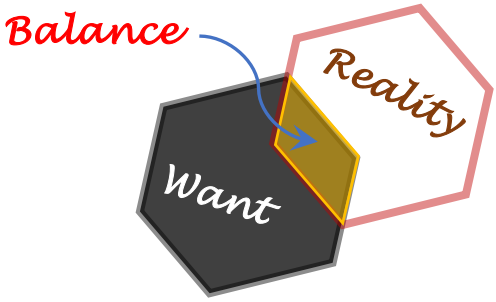

E-mail: info@fooktsuen.com Tel：3998-3721 Fax：3998-3723
Flat I, 12/F, Block 2, Kingswin Industrial Building, 32-40 Lei Muk Road, Kwai Chung, N.T.

Hospital and Radiation Shielding Job Reference

Year	Organization	Project Description
2014	Canossa Hospital	X-ray room renovation
2015 - 2106	Tin Shui Wai Hospital	Radiation protection shielding
2016 - 2018	Hong Kong Children's Hospital (Kai Tak)	Radiation protection shielding with lead lined door
2018	Hong Kong Adventist Hospital	Operation Theatre Renovation with radiation shielding
2018 - 2019	Housing Authority (Shek Kip Mei Estate)	Dental Clinic – radiation shielding with lead lined door
2018 - 2020	CUHK Medical Centre	Radiation protection shielding with lead glass window
2019 - 2021	Museum Plus (M+)	Radiography room - Radiation protection shielding with lead lined door
2020-2021	Castle Peak Hospital Dental Clinic	X-ray room - radiation protection door
2022 - 2023	SPCA – Animal Welfare and Education Centre in Tsing Yi	Radiation protection shielding with lead lined door & lead glass window
2021 - 2023	Kwong Wah Hospital Redevelopment (Phase I)	Radiation protection shielding with lead lined door & lead glass window

Table of Content

福泉工程有限公司
FOOK TSUEN ENGINEERING LIMITED
E-mail: info@fooktsuen.com Tel：3998-3721 Fax：3998-3723
Flat I, 12/F, Block 2, Kingswin Industrial Building, 32-40 Lei Muk Road, Kwai Chung, N.T.

1. Lead Lined Door

The lead lined doors are available in variant size with a continuous sheet of lead from 1mm to 12mm thick, laminated to door skin and sheet of high-density polystyrene or simulate material. The lead sheet extends the full width and height of the door. Lead thickness and lead equivalent glass are to be equal to the shielding in the adjacent wall.

We've created styles that let you match the variable specification, fashionable design character, but it keeps the radiation protection function firmly.

- Colorful
- Patterning
- Durable
- Graphical

Door Structure

It should be involving metal structure, wooden structure, and others.

Door Hardware

- Full Mortise Hinges
- Pivots
- Cylindrical Lock
- Mortise Lock

Door Finishing

The door finishing could be varying widely from paint finish, laminated sheet to stainless steel, graphical and others.

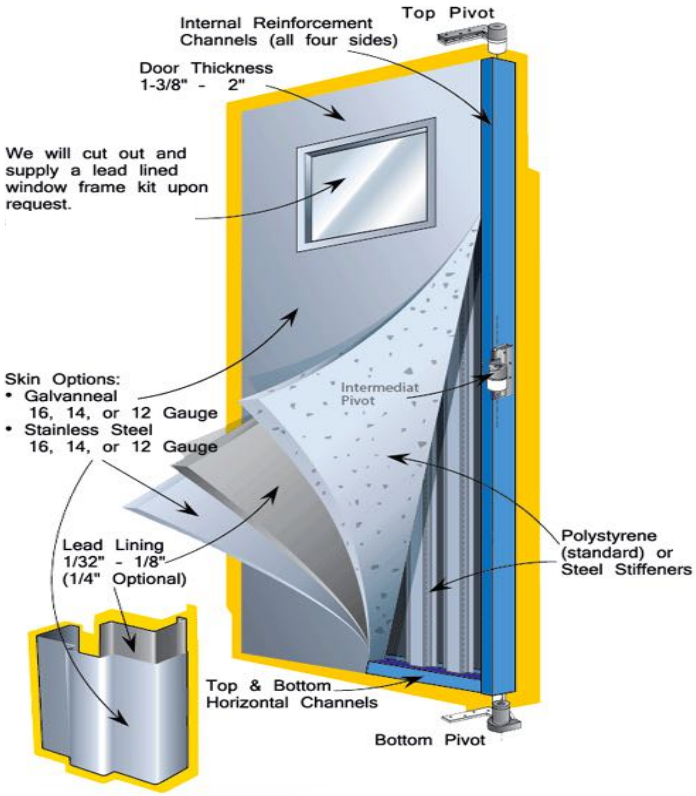

Radiation Protection Door

E-mail: info@fooktsuen.com Tel：3998-3721 Fax：3998-3723
Flat I, 12/F, Block 2, Kingswin Industrial Building, 32-40 Lei Muk Road, Kwai Chung, N.T.

Radiation Protection (Lead Lined Door Serial)

- Lead Lined Door Finished with Laminated Sheet
- Lead Glass Visual Panel

- Lead Glass Window

Radiation Protection Door

E-mail: info@fooktsuen.com Tel：3998-3721 Fax：3998-3723
Flat I, 12/F, Block 2, Kingswin Industrial Building, 32-40 Lei Muk Road, Kwai Chung, N.T.

Radiation Protection (Lead Lined Door Serial)

- Lead Lined Door with Painting Finish
- Lead Glass Visual Panel

- Lead Lined Double Door with Painting Finish

Radiation Protection Door

E-mail: info@fooktsuen.com Tel：3998-3721 Fax：3998-3723
Flat I, 12/F, Block 2, Kingswin Industrial Building, 32-40 Lei Muk Road, Kwai Chung, N.T.

Radiation Protection (Lead Lined Door Serial)

- Automatic Lead Lined Door with Laminate Sheet
- Lead Glass Visual Panel

Radiation Protection Door

E-mail: info@fooktsuen.com Tel：3998-3721 Fax：3998-3723
Flat I, 12/F, Block 2, Kingswin Industrial Building, 32-40 Lei Muk Road, Kwai Chung, N.T.

Radiation Protection (Lead Lined Door Serial)

- Automatic Lead Lined Sliding Door with Laminate Sheet

Radiation Protection Door

E-mail: info@fooktsuen.com Tel：3998-3721 Fax：3998-3723
Flat I, 12/F, Block 2, Kingswin Industrial Building, 32-40 Lei Muk Road, Kwai Chung, N.T.

Radiation Protection (Lead Lined Door Serial)

- Automatic Lead Lined Sliding Door with Colored Metal Sheet
- Lead Glass Visual Panel

Radiation Protection Door

E-mail: info@fooktsuen.com Tel：3998-3721 Fax：3998-3723
Flat I, 12/F, Block 2, Kingswin Industrial Building, 32-40 Lei Muk Road, Kwai Chung, N.T.

Radiation Protection (Lead Lined Door Serial)

- Automatic Lead Lined Door with Colored Metal Sheet
- Lead Glass Visual Panel

Radiation Protection Door

E-mail: info@fooktsuen.com Tel：3998-3721 Fax：3998-3723
Flat I, 12/F, Block 2, Kingswin Industrial Building, 32-40 Lei Muk Road, Kwai Chung, N.T.

Radiation Protection (Lead Lined Door Serial)

- Automatic Lead Lined Door with Colored Metal Sheet
- Lead Glass Visual Panel

Radiation Protection Door

E-mail: info@fooktsuen.com Tel：3998-3721 Fax：3998-3723
Flat I, 12/F, Block 2, Kingswin Industrial Building, 32-40 Lei Muk Road, Kwai Chung, N.T.

Radiation Protection (Lead Lined Door Serial)

- *Automatic Lead Lined Door with Colored Metal Sheet*
- *Lead Glass Visual Panel*

Radiation Protection Door

E-mail: info@fooktsuen.com Tel：3998-3721 Fax：3998-3723
Flat I, 12/F, Block 2, Kingswin Industrial Building, 32-40 Lei Muk Road, Kwai Chung, N.T.

2. Automatic Door System

2.1 Electrical Swing Door Operator

dormakaba

ED 100
ED 250

Swing door operators

E-mail: info@fooktsuen.com Tel：3998-3721 Fax：3998-3723
Flat I, 12/F, Block 2, Kingswin Industrial Building, 32-40 Lei Muk Road, Kwai Chung, N.T.

Swing door operators with force balancing technology*

With their ED 100 and ED 250, dormakaba offers electromechanical swing door operators for various fields of application. Simply select the suitable version according to your prevailing door-leaf width and weight: While the ED 100 is suitable for doors with a weight of up to 160 kg or a door width of 1,100 mm, the ED 250 is designed for doors with a width of 1,600 mm or a door weight of 400 kg.

Apart from the extended cover, dormakaba also provides an easy-to-install integrated door coordinator. With the aid of the dormakaba Upgrade Cards, the system's functional range may be adapted to various door versions. The large scope of integrated functions furthermore ensures that the majority of possible applications may easily be realized.

Benefits

- Flexible configuration: Customers only pay for the functions they actually require.
- Low-noise application due to multi-stage gear.
- Elegant visual appearance: dormakaba design provides a operator height of only 70 mm.
- Various functions as standard.
- With integrated smoke detector
- **New:** Technically revised arm system in a new design.
- **New:** Better durability of the gear due to the use of the force balancing technology.

Fields of application

- For single- or double-leaf swing doors. Choose between the ED 100 and the ED 250 in accordance with your prevailing door-leaf width and weight.
- The version with slide channel as well as the version with standard arm are suitable for application at fire and smoke doors.
- Thanks to its low- and full-energy version, the system is suitable to automate both rarely and heavily frequented internal and external doors.
- High torque for full-automatic swing doors with radar motion control.
- For interior and exterior doors.

* Self-alligning gear components during operation, whereby a much better distribution of internal forces can be achieved.

Application: ED 100/ED 250

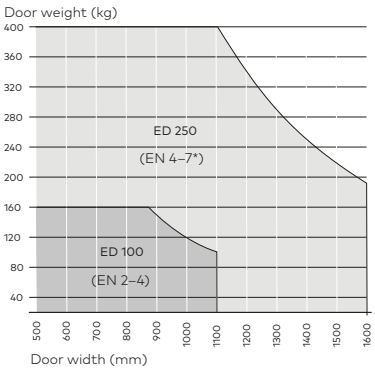

The operators ED 100 and ED 250 are suitable for most swing doors provided that the combination of door width and door weight lies within the defined functional area.

This diagram allows you to determine the maximum values for the door width or door weight or to determine the suitable operator for existing doors. All values apply to an ideal door. The achievable speed is to be lowered for heavy doors in order to ensure the safety of people.

Additional door components such as door hinges, seals, locks or other mechanical components may restrict the functional area.

The specifications are valid up to a lintel depth of 300 mm; at a depth > 301 mm the door panel weight of the ED 250 is reduced to 160 kg irrespective of the door width.

*EN 7: lintel depth max. 125 mm

THIRD-PARTY VERIFIED EPD ISO 14025 and EN 15804 Institut Bauen und Umwelt e.V.

Our Sustainability Commitment
We are committed to foster a sustainable development a long our entire value chain in line with our economic, environmental and social responsibilities to ward currentand future generations.

Sustainability at product level is an important, future-oriented approach in the field of construction. In order to give quantified disclosures of a product's environmental impacts through its entire life cycle, dormakaba provides Environmental Product Declarations (EPD), based on holistic life cycle assessments.

The full EPD is available for download at www.dormakaba.com.

E-mail: info@fooktsuen.com Tel：3998-3721 Fax：3998-3723
Flat I, 12/F, Block 2, Kingswin Industrial Building, 32-40 Lei Muk Road, Kwai Chung, N.T.

Radiation Protection (Lead Lined Door Serial)

Swing door operator in modular design

Required operating conditions	
Ambient temperature	–15 to +50 °C
Only suitable for dry environments	Relative humidity max. 93 % (non condensing)
Power supply	230 V AC 50 Hz +/– 10 %
Class of protection	IP 20

General specifications	
Dimensions (W x H x D)	685 x 70 x 130 mm
Dimensions with integrated smoke detector (W x H x D)	735 x 70 x 130 mm
Min. clearance between hinges (double systems)	1,400 mm
Min. clearance between hinges for ESR (double systems)	1,450 mm
Weight of single version	12 kg
Power supply for external accessories	24 V DC +/– 10 %, 1.5 A
Opening angle	Max. 110°
Manufactured to ISO 9001	yes
Environmental product declaration in accordance with ISO 14025 Programme holder: Institute Construction and Environment e.V. Declaration number: EPD-DOR-2012211-E	yes

Integrated functions		
Hold-open time		30 s, 180 s (optional)
Blocking behavior		Reversing/Door closer function
Locking feedback contact		Motor lock
Wind load control		up to 150 N
Voltage-independent braking circuit		Adjustable via potentiometer
Electronic latching action pulse		Force adjustable
LED status indicator	green	Operating voltage indicator
	red	Malfunction indicator
	yellow	Service interval indicator
Integrated program switch		OFF
		AUTOMATIC
		PERMANENT OPEN
		EXIT ONLY (only for single-leaf systems)
User interface with information display		Status indicator and parameterisation
Slot for dormakaba Upgrade Cards		Extension of functional range
Update interface		Firmware update
TMP – Temperature Management Program		Temperature-related overload protection
IDC – Initial Drive Control		Driving phase optimisation
Cycle counter		0 – 1,000,000 (reasonably subdivided)
Power Assist function		Servo-supported when opened manually
Push & Go function		Door opens when moved manually by 4°

Inputs, terminals max. 1.5 mm²	
Potential-free activator	Inside and outside (NO contact)
Energized activator	8 – 24 V DC/AC + 10 %
Night-/Bank (key switch)	NO contact/NC contact
Safety sensor	Hinge side and opposite hinge side (NC contact)
Test signal for safety sensor	Hinge side and opposite hinge side
Emergency-Off pushbutton/ Lock switch	NC contact/NO contact

Outputs, terminals max. 1.5 mm²	
Potential-free door status contact, alternatively	Door closed
	Door open
	Malfunction

ED 100	
Max. power consumption	120 Watts
Closing force EN 1154	EN 2–4, adjustable
Max. door-leaf weight for reveal depths of up to 300 mm	160 kg depending on the door width
Door-leaf width	700–1,100 mm
Opening speed 0 – 90°	4* – 12 seconds
Closing speed 90 – 0°	5* – 21 seconds
Axle extension	20/30/60 mm
Reveal depth for slide channel	+/– 30 mm
Reveal depth for slide channel CPD	30 – 60 mm
Reveal depth for standard arm	0–300 mm

ED 250	
Max. power consumption	240 Watts
Closing force	EN 4-7**, adjustable
Max. door-leaf weight for reveal depths of up to 300 mm	400 kg depending on the door width
Max. door-leaf weight for reveal depths from 301 mm to 500 mm	160 kg
Door-leaf width	700 –1,600 mm
Opening speed 0 – 90°	3* – 12 seconds
Closing speed 90 – 0°	4* – 21 seconds
Axle extension	20/30/60/90 mm
Reveal depth for slide channel	+/– 30 mm
Reveal depth for slide channel CPD	30 – 60 mm
Reveal depth for standard arm	0 – 500 mm
For reveal depths standard arm for fire protection	0 – 350 mm

* Depending on the door leaf weight, it is automatically limited in the low-energy operating mode according to EN 16005 or DIN 18650, BS 7036-4 and ANSI 156.19. Max. speeds are achieved only in the full-energy mode, with a low door panel weight and a taught opening angle of at least 95°.
** EN 7: lintel depth max. 125 mm

E-mail: info@fooktsuen.com Tel：3998-3721 Fax：3998-3723
Flat I, 12/F, Block 2, Kingswin Industrial Building, 32-40 Lei Muk Road, Kwai Chung, N.T.

dormakaba ED 100, ED 250

Mounting on hinge side, pull-version with slide channel, cover BASIC, standard axle extension

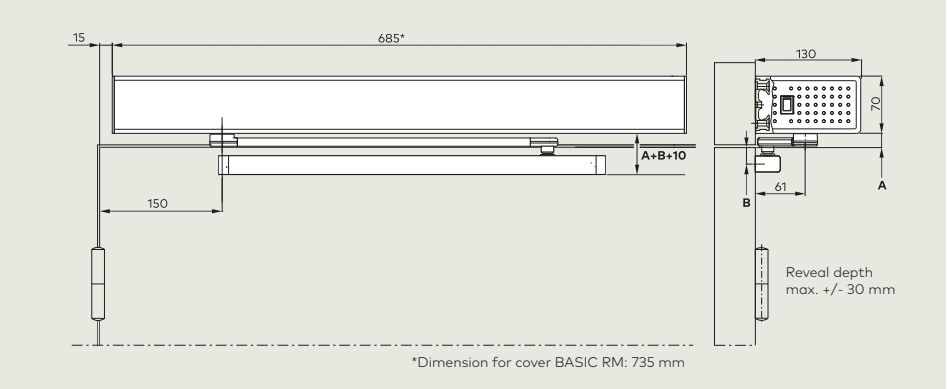

Drilling template: pivot pin short 12.5 mm

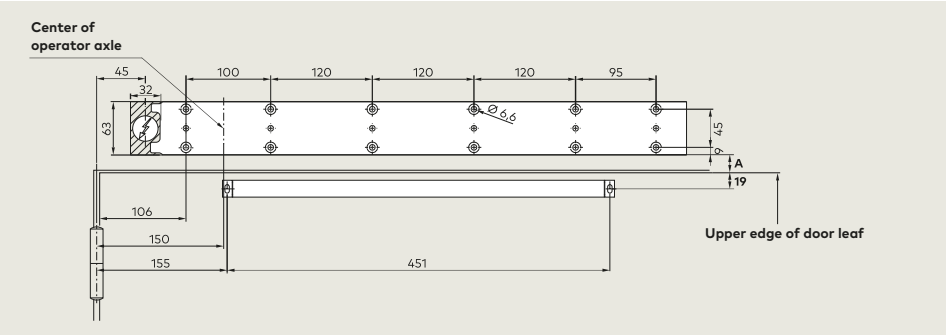

Drilling template: pivot pin long 25 mm

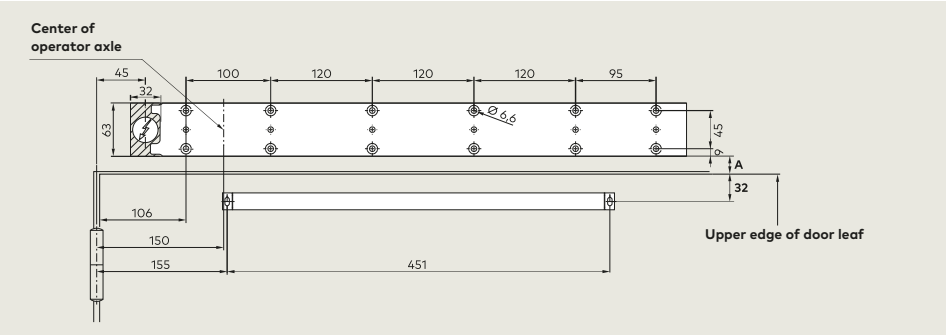

Axle extension	Standard	20 mm	30 mm	60 mm	90 mm*
A	22 mm	42 mm	52 mm	82 mm	112 mm*

Pivot pin	12.5 mm	25 mm
B	19 mm	32 mm

* only for ED 250

4

E-mail: info@fooktsuen.com Tel：3998-3721 Fax：3998-3723
Flat I, 12/F, Block 2, Kingswin Industrial Building, 32-40 Lei Muk Road, Kwai Chung, N.T.

Swing door operator in modular design

Mounting on hinge side, pull-version with CPD arm, cover BASIC, standard axle extension

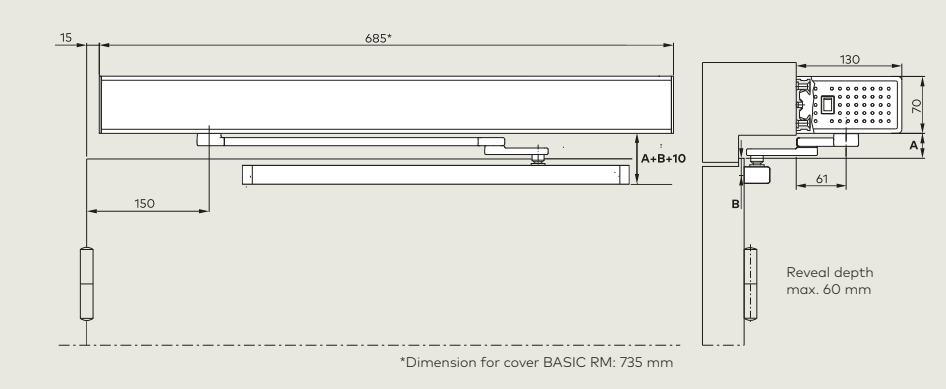

Drilling template: pivot pin short 12.5 mm

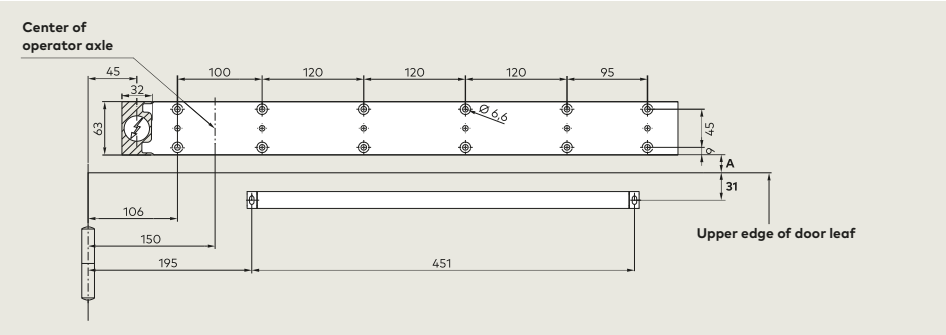

Drilling template: pivot pin long 25 mm

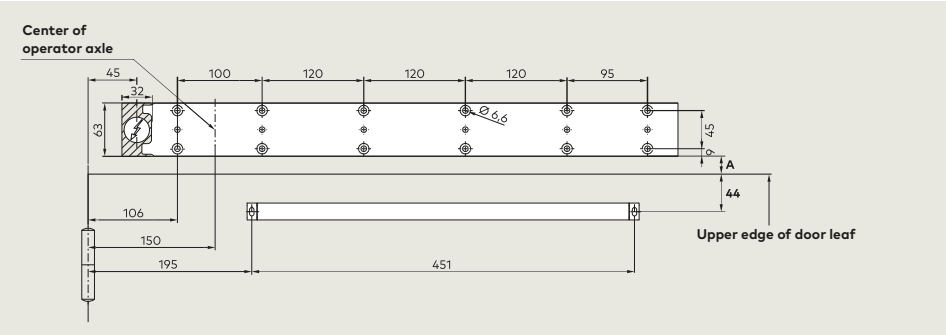

Axle extension	Standard	20 mm	30 mm	60 mm	90 mm*
A	22 mm	42 mm	52 mm	82 mm	112 mm*

Pivot pin	12.5 mm	25 mm
B	31 mm	44 mm

* only for ED 250

E-mail: info@fooktsuen.com Tel：3998-3721 Fax：3998-3723
Flat I, 12/F, Block 2, Kingswin Industrial Building, 32-40 Lei Muk Road, Kwai Chung, N.T.

dormakaba ED 100, ED 250

Mounting on opposite hinge side, push-version with slide channel, cover BASIC, standard axle extension

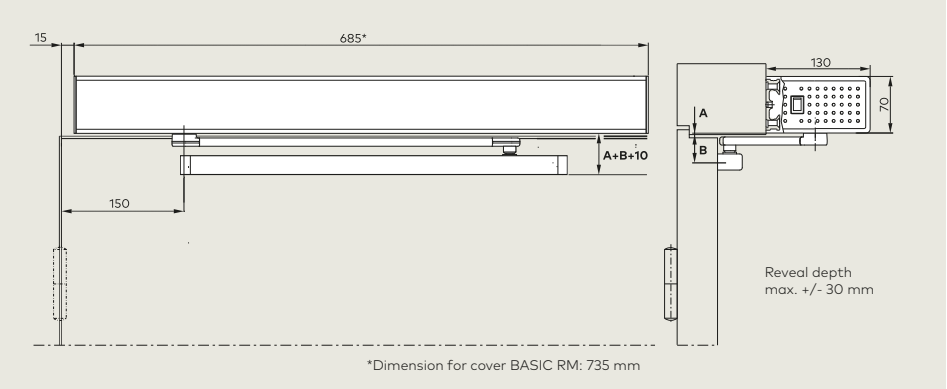

Drilling template: pivot pin short 12.5 mm

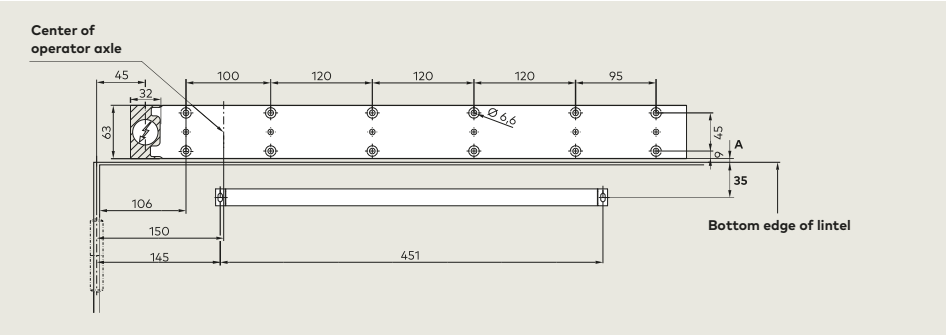

Drilling template: pivot pin long 25 mm

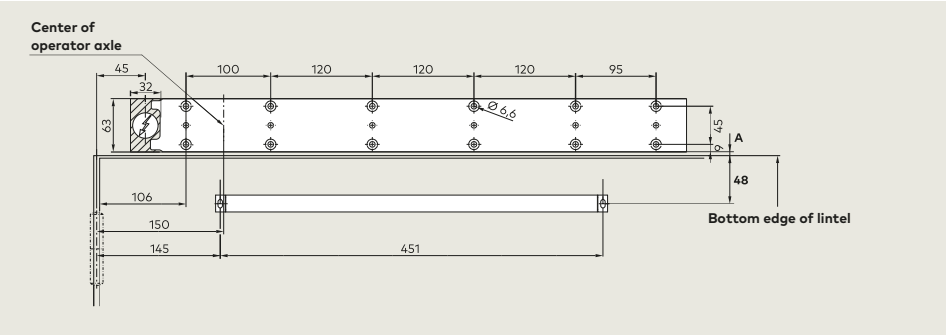

Axle extension	Standard	20 mm	30 mm	60 mm	90 mm*
A	5 mm	25 mm	35 mm	65 mm	95 mm*

Pivot pin	12.5 mm	25 mm
B	35 mm	48 mm

* only for ED 250

6

Mounting on opposite hinge side, push-version with arm, cover BASIC, standard axle extension

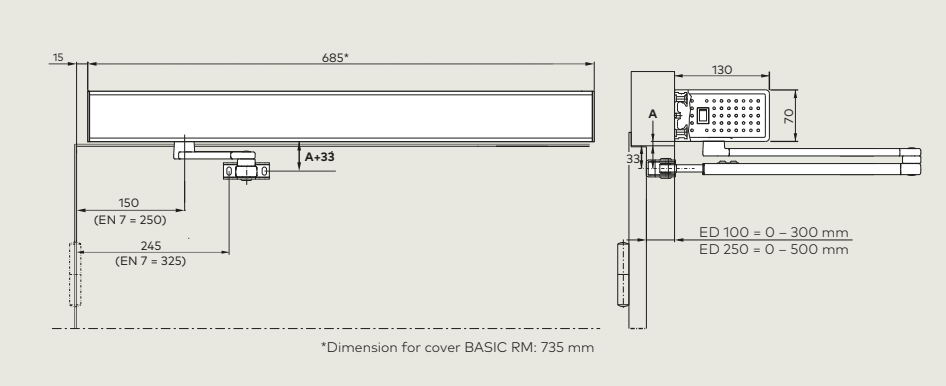

Drilling template: arm EN 3-6

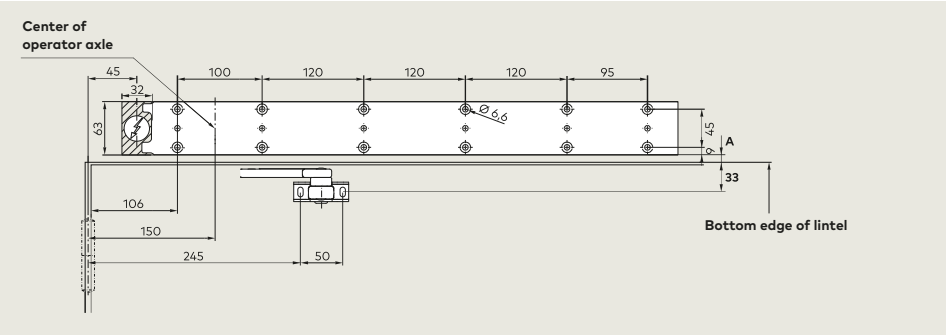

Drilling template: arm EN 7

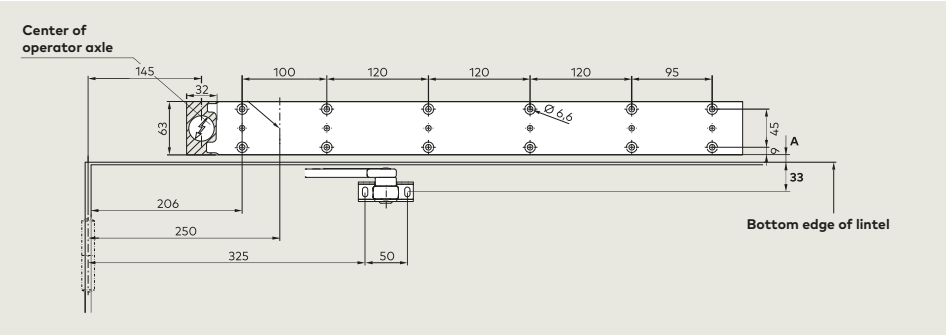

Axle extension	Standard	20 mm	30 mm	60 mm	90 mm*
A	9 mm	29 mm	39 mm	69 mm	99 mm*

* only for ED 250

E-mail: info@fooktsuen.com Tel：3998-3721 Fax：3998-3723
Flat I, 12/F, Block 2, Kingswin Industrial Building, 32-40 Lei Muk Road, Kwai Chung, N.T.

dormakaba ED 100, ED 250

Mounting on hinge side, pull-version with slide channel, cover PROFESSIONELL, standard axle extension

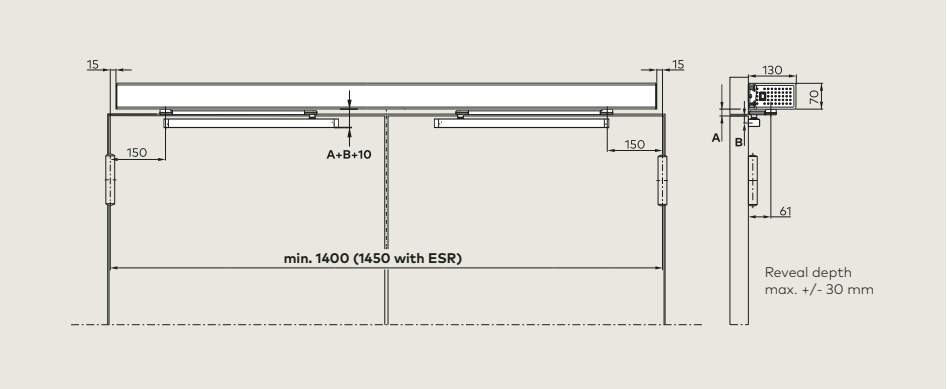

Drilling template: pivot pin short 12.5 mm

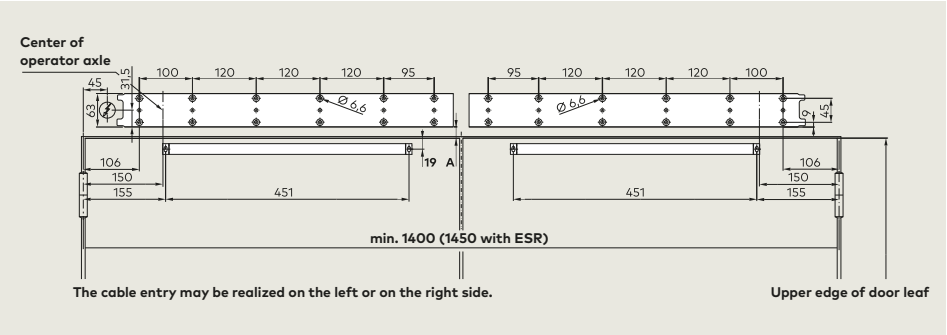

Drilling template: pivot pin long 25 mm

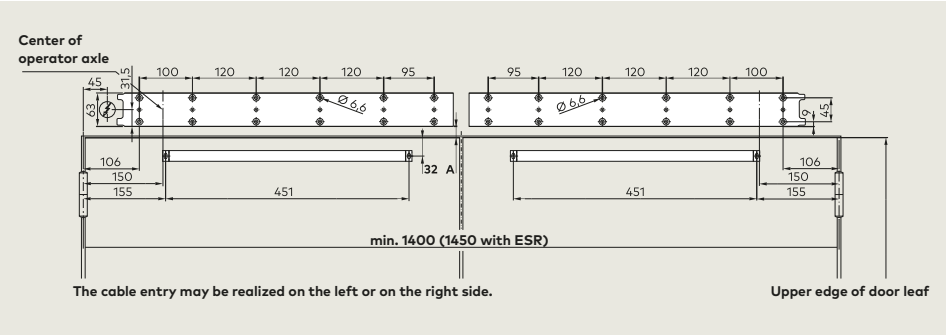

Axle extension	Standard	20 mm	30 mm	60 mm	90 mm*
A	22 mm	42 mm	52 mm	82 mm	112 mm*

Pivot pin	12.5 mm	25 mm
B	19 mm	32 mm

* only for ED 250

E-mail: info@fooktsuen.com Tel：3998-3721 Fax：3998-3723
Flat I, 12/F, Block 2, Kingswin Industrial Building, 32-40 Lei Muk Road, Kwai Chung, N.T.

Mounting on hinge side, pull-version with CPD arm, cover PROFESSIONELL, standard axle extension

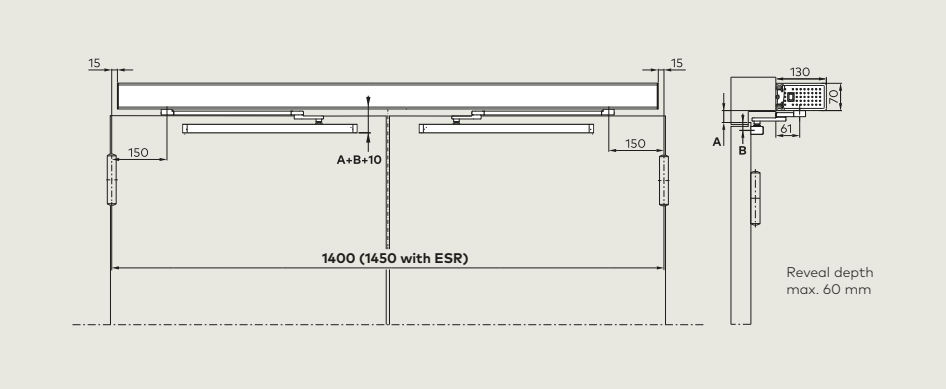

Drilling template: pivot pin short 12.5 mm

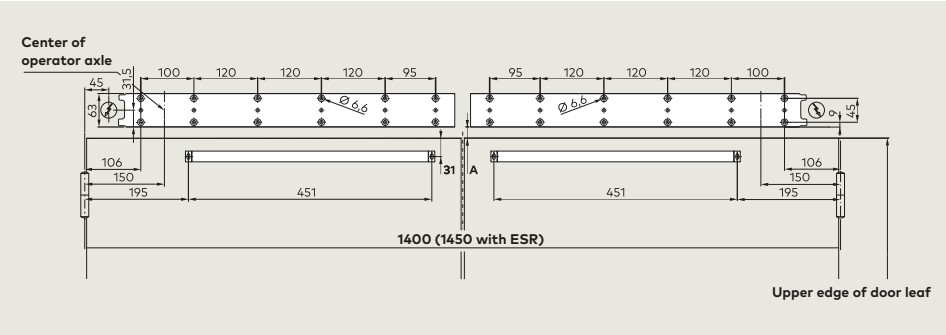

Drilling template: pivot pin long 25 mm

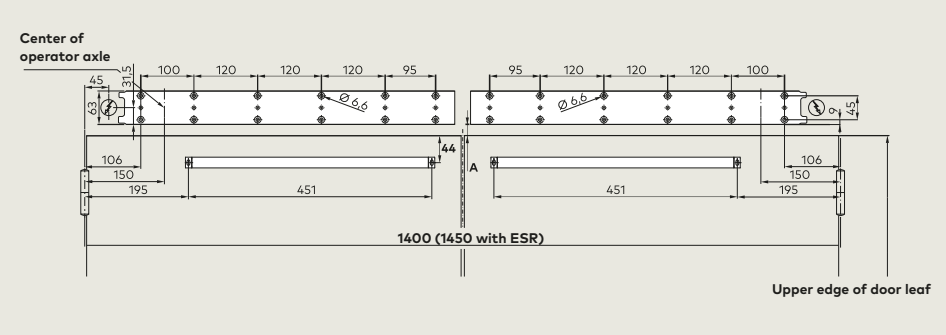

Axle extension	Standard	20 mm	30 mm	60 mm	90 mm*
A	22 mm	42 mm	52 mm	82 mm	112 mm*

Pivot pin	12.5 mm	25 mm
B	31 mm	44 mm

* only for ED 250

福泉工程有限公司
FOOK TSUEN ENGINEERING LIMITED
E-mail: info@fooktsuen.com Tel：3998-3721 Fax：3998-3723
Flat I, 12/F, Block 2, Kingswin Industrial Building, 32-40 Lei Muk Road, Kwai Chung, N.T.

dormakaba ED 100, ED 250

Mounting on opposite hinge side, push-version with slide channel, cover PROFESSIONELL, standard axle extension

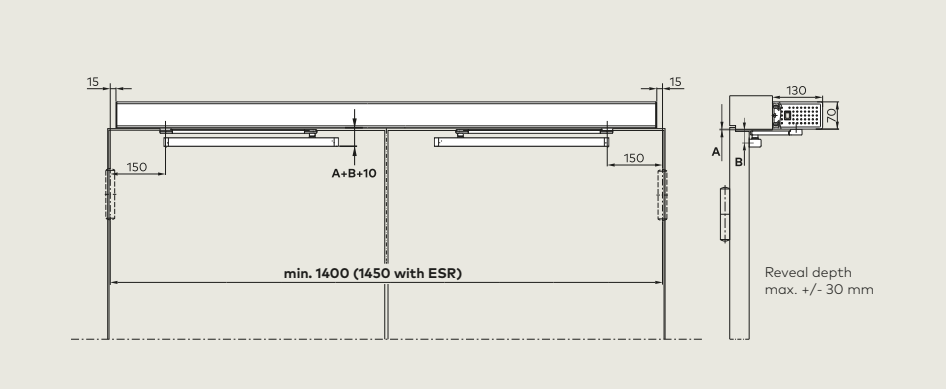

Drilling template: pivot pin short 12.5 mm

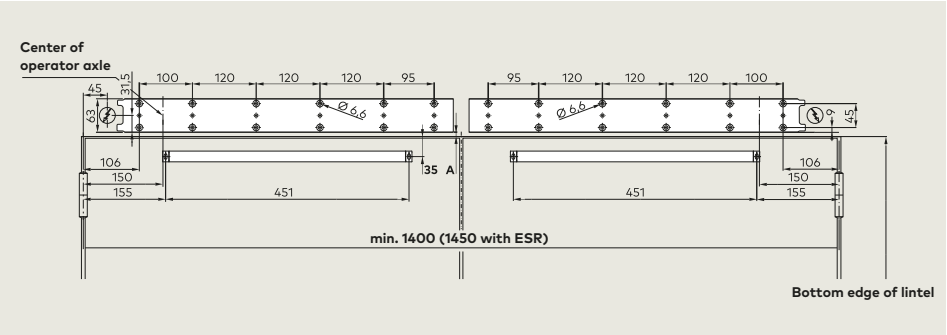

Drilling template: pivot pin long 25 mm

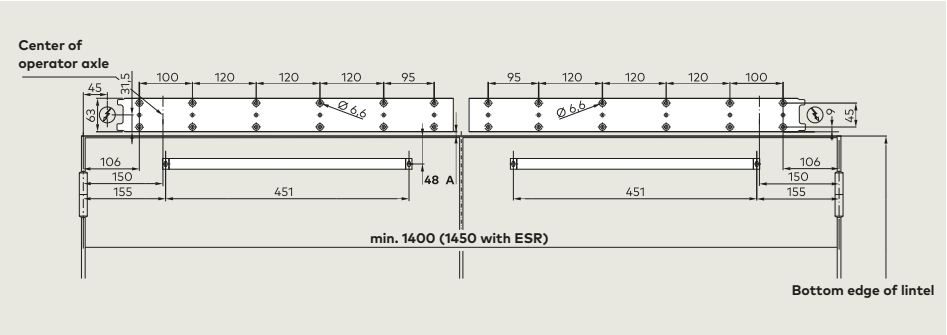

Axle extension	Standard	20 mm	30 mm	60 mm	90 mm*
A	5 mm	25 mm	35 mm	65 mm	95 mm*

Pivot pin	12.5 mm	25 mm
B	35 mm	48 mm

* only for ED 250

福泉工程有限公司
FOOK TSUEN ENGINEERING LIMITED
E-mail: info@fooktsuen.com Tel：3998-3721 Fax：3998-3723
Flat I, 12/F, Block 2, Kingswin Industrial Building, 32-40 Lei Muk Road, Kwai Chung, N.T.

Mounting on opposite hinge side, push-version with arm, cover PROFESSIONELL, standard axle extension

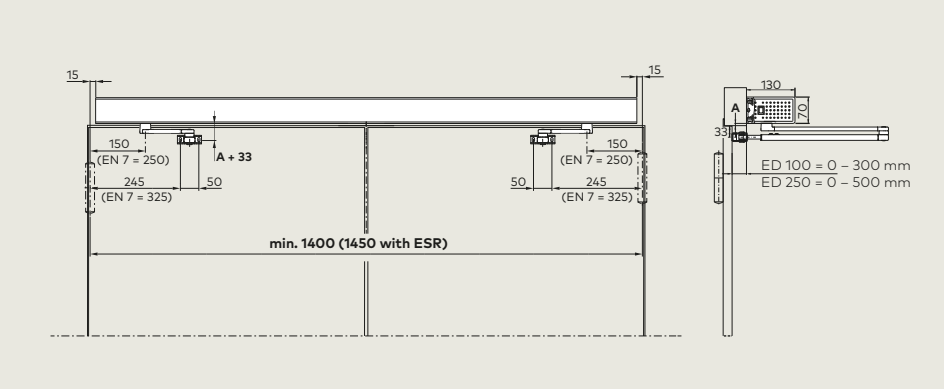

Drilling template: arm EN 3-6

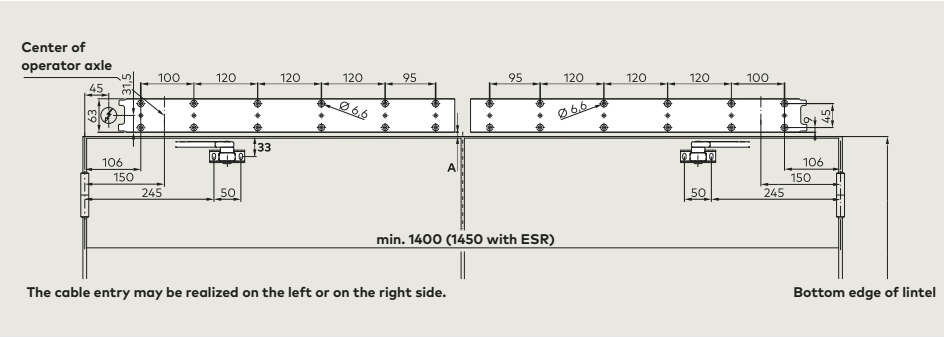

Drilling template: arm EN 7

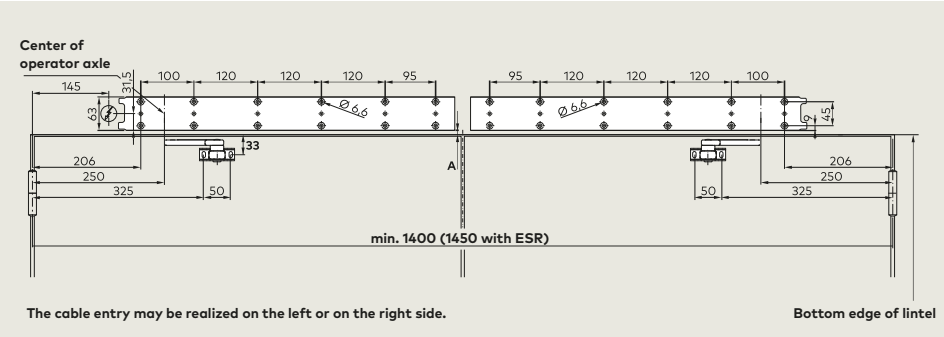

Axle extension	Standard	20 mm	30 mm	60 mm	90 mm*
A	9 mm	29 mm	39 mm	69 mm	99 mm*

* only for ED 250

E-mail: info@fooktsuen.com Tel：3998-3721 Fax：3998-3723
Flat I, 12/F, Block 2, Kingswin Industrial Building, 32-40 Lei Muk Road, Kwai Chung, N.T.

System setup

The example system is equipped with all available components. It is selected in accordance with the door-leaf width and the door-leaf weight.

01 Mains switch
02 Mains connection
03 Connection unit
04 Axle connection on both sides
05 Operator system (motor/gear/spring)
06 Adjustment of closing force
07 Control unit
08 Switching power supply unit
09 Slot for dormakaba Upgrade Cards
10 User interface with information display
11 ED Cover Basic RM*
12 Internal program switch
13 Slide channel (set)*
14 Standard arm*
15 Slide channel CPD (set)*
16 Complete cover*
17 Cover BASIC RM*

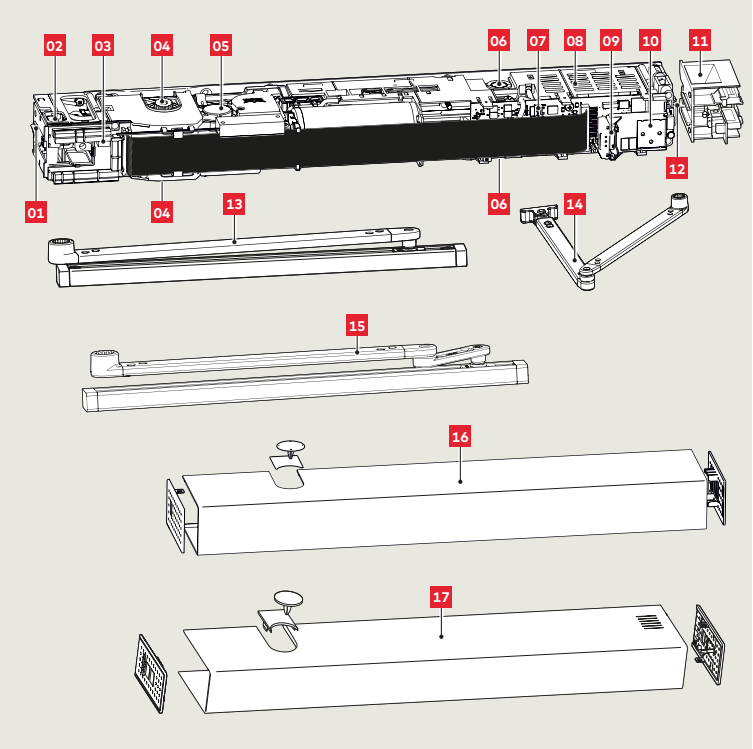

*supplied separately

System	Specification	Order No.
ED 100 swing door operator 230 V	EN 2 - 4, push-version, fire protection; EN 2 - 4, pull-version, fire protection	29222311
ED 250 swing door operator 230 V	EN 4 - 7, push-version, fire protection; EN 4 - 6, pull-version, fire protection	29202311
ED 250 swing door operator PA	EN 4 - 7, push-version, fire protection; EN 4 - 6, pull-version, fire protection	29202315

Partly automated double doors with ED 250 Power-Assist (PA)

In case of double doors, both door leaves are usually automated. However, it is often sufficient to have only one door leaf automated for passenger traffic. In that situation, the ED 250 PA in combination with a standard ED 100 or ED 250 will come into play and offer a cost-effective solution. The ED 250 PA is used on the inactive leaf in case of double doors. While the active leaf can open fully automatically, the inactive panel is opened only manually and functions as a door closer. Optionally, the Power Assist function allows for an easy opening. However, the integrated locking device allows you to lock both door panels to a permanent open state without the use of any additional components. The ED 250 PA is suitable for fire and smoke control doors and be combined with the ED ESR set for an ED ESR 1/2 for double doors. An upgrade card is not required for the ED 250 PA.

E-mail: info@fooktsuen.com Tel：3998-3721 Fax：3998-3723
Flat I, 12/F, Block 2, Kingswin Industrial Building, 32-40 Lei Muk Road, Kwai Chung, N.T.

Opening and closing forces

Way of mounting	Lintel mounting on hinge side with slide channel (pull-version)				Lintel mounting on opposite hinge side with standard arm (push-version)/ slide channel (push-version)			
	ED 100		**ED 250**		**ED 100**		**ED 250**	
	minimum	maximum	minimum	maximum	minimum	maximum	minimum	maximum
Closing force EN 1154	EN 3	EN 4	EN 4	EN 6	EN 3	EN 4	EN 4	EN 7
Manual closing force (N)***	18	34	26	65	18	37	26	70
Closing force in AUTOMATIC mode (N)**	20	FE: 150 LE: 67	20	FE: 150 LE: 67	20	FE: 150 LE: 67	20	FE: 150 LE: 67
Manual opening force (N)	40	50	55	85	40	55	60	90
Opening force in AUTOMATIC mode (N)**	20	FE: 150 LE: 67	20	FE: 150 LE: 67	20	FE: 150 LE: 67	20	FE: 150 LE: 67
Opening force with activated Power Assist function (N)*	23	23	23	23	23	23	23	23

FE = With Full-Energy or Fire Protection Upgrade Card, **LE** = Low-Energy standard operator without upgrade card
* Power-Assist function is adjusted to maximum (function is activated at 0° opening width)
** The force is activated by an automatic opening in AUTOMATIC mode.
*** By installing the push-version with slide channel, the forces are reduced by approx. 33%

Door closer mode & AUTOMATIC mode

Users may choose between two operation modes: door closer and AUTOMATIC mode. While adjusted to door closer mode (parameter Hd = 1), the system is optimized for manual operation. With its optional Power-Assist function, the door closer mode is tailored to predominantly manually-operated doors where a door closer function is desired.
The AUTOMATIC mode (parameter Hd = 0) in turn is especially suitable for mainly automatic access via motion detector or pushbutton.

In addition, the door reverses as soon as it runs into an obstruction while closing. On activation of the AUTOMATIC mode, also the wind load control is available. Although in AUTOMATIC mode, the doors are still ready for manual access. In this case we would recommend the Push & Go function.

Wind load control

ED 100 and ED 250 operators are especially suitable for applications at exterior doors that are subject to varying wind loads and for interior doors separating rooms where different pressure prevails. While the system is in AUTOMATIC mode, the wind load control monitors the driving speed and adjusts the speed correspondingly if it exceeds or falls below the adjusted value.

In conjunction with the Full-Energy Upgrade Card, the operator provides a force of up to 150 N at the main closing edge – which is then used to compensate environmental influences.
The electronic latching action is activated during the last 5° of the closing cycle in order to support the closing action.

Power-Assist function

The Power-Assist function may be activated while the door is in door closer mode (parameter Hd = 1). As soon as a user opens the door by some degrees, the servofunction supports the manual opening cycle. In addition, the servo support automatically adapts to the adjusted size of the door closer. The level of servo support is adjustable in order to meet the requirements of DIN 18040, DIN Spec 1104, CEN/TR 15894, BS 8300/2100 and document "M", even up to class EN 6. The smallest adjustable opening torque amounts to 23 Nm/5 lbf – unless the hold-open device is triggered or in the event of a power failure. With the aid of the Power-Assist function, the system meets the requirements of the European standard EN 1154 and provides barrier-free access during standard operation. However, it is not possible to use the system in conjunction with the Push & Go function or the wind load control as these functions may affect the easy manual opening of the door.

E-mail: info@fooktsuen.com Tel：3998-3721 Fax：3998-3723
Flat I, 12/F, Block 2, Kingswin Industrial Building, 32-40 Lei Muk Road, Kwai Chung, N.T.

Covers

The covers are packed separately from the operator system, which makes it easy to select the respectively required cover. dormakaba provides covers for single and double systems. All covers are designed for on-site mounting. They are furthermore suitable for both the ED 100 and the ED 250 version.

When creating double systems, the four-position internal program switch has to be replaced by a three-position switch, which means that the exit only function is only available in combination with the external program switch. Double-leaf systems are required for doors where the clearance between the hinges exceeds 1,400 mm (1,450 mm with ESR).

ED BASIC cover – Aluminum cover for single swing door systems

ED BASIC RM cover – Aluminum cover for single swing door systems

	Color	Order No.
ED BASIC cover	silver	29241001
	white	29241002
	special color	29241003
ED BASIC RM cover with integrated smoke detector RM-ED	silver	29241011
	white	29241012
	special color	29241013

ED VARIO cover

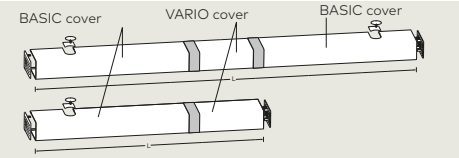

This aluminum cover is designed to create a continuous cover for double swing door systems. In addition to the VARIO cover, you will require two ED BASIC covers, which are mounted on the right and on the left of the operator system. The ED VARIO cover is designed to hide the gap between the two covers and may be sawed to the appropriate size on site. With the aid of the VARIO cover, you may also increase the length of single-leaf operator. The cover may be installed on the left or on the right side and can be sawed to the appropriate size on site. The VARIO cover is silver-colored and available in two versions.

ED VARIO RM cover with integrated smoke detector (color: silver)

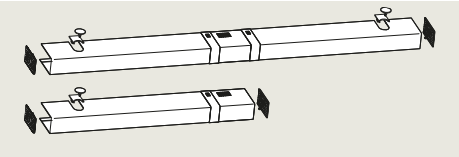

Number of door leaves Dimensions	Type of cover	Order No.
single version		
800 mm – 1,600 mm	2,200 mm	29242001
single version with integrated smoke detector		
900 mm – 1,600 mm	2,200 mm	29242011
double version		
1,500 mm – 2,200 mm	2,200 mm	29242001
1,500 mm – 3,200 mm	3,200 mm	29242002
double version with integrated smoke detector		
1,610 mm – 2,200 mm	2,200 mm	29242011
1,610 mm – 3,200 mm	3,200 mm	29242021

ED PROFESSIONAL cover

This aluminum cover is designed to create double-leaf swing door systems. The ED PROFESSIONAL cover is a continuous and seamless cover and available in lengths from 1,400 mm (1,450 mm with ESR) to 3,200 mm. With the PROFESSIONAL cover, also single operator may be extended to a length of up to 3,000 mm towards the main closing edge.

	Color	Order No.
ED PROFESSIONAL cover	siver-colored or as special color	29243003

E-mail: info@fooktsuen.com Tel：3998-3721 Fax：3998-3723
Flat I, 12/F, Block 2, Kingswin Industrial Building, 32-40 Lei Muk Road, Kwai Chung, N.T.

Arms

ED slide channel set

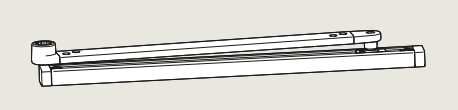

ED 100 and ED 250: For reveal depths +/– 30 mm

Mounting version	Color	Order No.
Pull- and push-version	silver	29275021
	white	29275022
	special color	29275023

ED slide channel set CPD

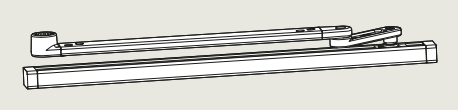

ED 100 and ED 250: For reveal depths 30 - 60 mm

Mounting version	Color	Order No.
Pull-version	silver	29276021
	white	29276022
	special color	29276023

ED standard arm 225

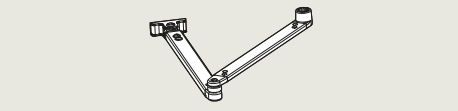

ED 100 and ED 250: For reveal depths 0 – 225 mm
EN 7: For max. reveal depths 125 mm

Mounting version	Color	Order No.
Push-version	silver	29271021
	white	29271022
	special color	29271023

ED standard arm 500

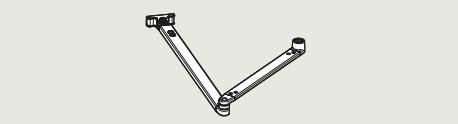

ED 100: For reveal depths 226 – 300 mm
ED 250: For reveal depths 226 – 300 mm und 400 kg, for reveal depths 301 – 500 mm und 160 kg

Mounting version	Color	Order No.
Push-version	silver	29272021
	white	29272022
	special color	29272023

ED axle extensions

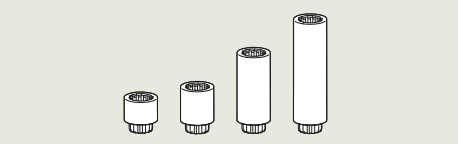

The axle extensions 20, 30 and 60 mm are suitable for all arm versions of the ED 100 & ED 250. The axle extensions 90 mm is only suitable for all arm versions of the ED 250.

The axle extensions are available in chromated black.

ED axle extension	Order No.
20 mm	29278012
30 mm	29278013
60 mm	29278016
90 mm	29278019

Decorative foil for covering the axle extension

without illustration

Foils are available to cover the galvanised ED axle extensions.

Color	Order No.
silver	29278500
white	29278501
black	29278502

Glass door saddle plate for ED

For fixing the slide channel to toughened glass doors (with 10 to 13 mm glass thickness).

Order No.
29275030

E-mail: info@fooktsuen.com Tel：3998-3721 Fax：3998-3723
Flat I, 12/F, Block 2, Kingswin Industrial Building, 32-40 Lei Muk Road, Kwai Chung, N.T.

dormakaba Upgrade Cards

dormakaba Upgrade Cards are designed to increase the functional range of our swing door operators. The installation of the cards is very easy: Just insert the respective Upgrade Card into the proper slot at the control unit and the software will be transferred automatically. dormakaba offers different Upgrade Cards, which may either be combined or installed as individual components. Please note that the respective function of the Upgrade Card is only available as long as the card is connected to the control unit.

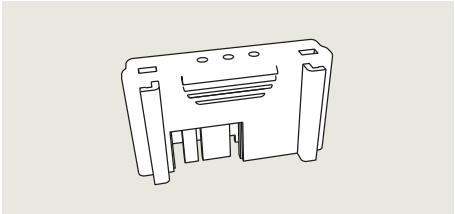

Upgrade Card Full-Energy – blue

All operators are supplied as Low-Energy version, which means that the adjustable opening and closing speed range is restricted to a certain limit. The respective limits depend on the prevailing door-leaf width and door-leaf weight and may vary between 1° and 27° per second. These limits furthermore comply with DIN 18650 and EN 16005 (German Industrial Standard), ANSI 156.19 (American Standard) and BS 7036 (British Standard). Depending on their field of application, such swing door operator might not require safety sensors when operated in Low-Energy Mode. If you need a higher driving speed, you will require the respective Full-Energy Upgrade Card. The driving speed may then be increased to a maximum of 50°/second with the ED 100 and to 60°/second with the ED 250. In this case the swing path has to be monitored by safety sensors (mounted onto the door leaf).

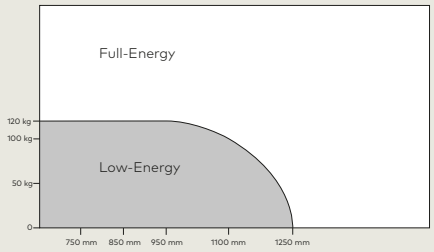

Recommended weight/dimensions for the installation of the Full-Energy Upgrade Card

ED Upgrade Card Full-Energy	Color	Order No.
ED 100	blue	29251022
ED 250	blue/ transparent	29251020

Upgrade Card Fire Protection ED 100 – red

When the ED 100 is installed on fire doors with hold open requeirents and a stand alone smoke detector, the Upgrade Card Fire Protection is required for compliance with the guidelines for hold-open devices. Apart from its smoke detector connection (as monitored current loop), the card also offers a manual reset function (by opening the door), a full-energy function and the system may be triggered at the door leaf. Thanks to the card's integrated full-energy function, no additional Full-Energy Upgrade Card is required.

ED Upgrade Card Fire Protection	Color	Order No.
ED 100	red	29252022
ED 250	red/ transparent	29252020

Manual reset by opening the door

A triggered hold-open system has to be reactivated manually. As soon as the function has been activated, it suffices to open the door until it has almost reached the adjusted opening width.

Triggering at door leaf

It must be possible to trigger a hold-open device manually in order to close the door. With ED 100 & ED 250, users may deactivate the hold-open function by a slight push against the door leaf.
So no pushbutton is required to trigger a closing cycle; however, it is still available as an option.

E-mail: info@fooktsuen.com Tel：3998-3721 Fax：3998-3723
Flat I, 12/F, Block 2, Kingswin Industrial Building, 32-40 Lei Muk Road, Kwai Chung, N.T.

Upgrade Card Professional
The Upgrade Card Professional provides functions for swing door operators that used to be realized with the aid of external components.

Extended hold-open time of 180 s
The hold-open time of up to 30 seconds, which is already integrated in the basic system, is sufficient for most applications. However, an extended hold-open time of up to 180 seconds may easily be realized with the aid of the Full-Energy Upgrade Card.

Flip-Flop function
In standard mode, the operator opens the door after a Night-/Bank pulse has been triggered (via the key switch) and closes it on expiry of the hold-open time. When the flip-flop function is activated, the door opens and remains in PERMANENT OPEN position as soon as the Night-/Bank function is triggered at the respective input. The door will close when the Night-/Bank function is activated again. The hold-open period in PERMANENT OPEN position is not limited, and the standard hold-open time is available at all other activator inputs. Please note that smoke detectors always have priority to the PERMANENT OPEN function.

Nurse-Bed function
(only for double-leaf door systems) As soon as a pulse is triggered, both door leaves of the double-leaf system will open. Sometimes this may not be necessary, as the full passage width is not required. Whenever this is the case, the nurse-bed function is perfectly suitable to control the two door leaves separately.
The activator that is connected to the external detector only institutes the active door leaf to open. The resulting passage width is sufficiently big to allow people to use the door.
The other activator (the one that is connected to the internal detector) is used to open the door to the full opening width. In this case, both door leaves open so that the full passage width is accessible.
This function reduces the energy consumption and may help to avoid draughts and thus heat loss.

	Color	Order No.
ED Upgrade Card Professional ED 100 & ED 250	green	29253001

Upgrade Card DCW®
The Upgrade Card DCW® provides the operator with a DCW® Bus connection. The integrated DCW® operator supports the following accessory:

Emergency exit motor lock with self-locking action SVP DCW®
The required procedure is controlled by the operator while the operator and the motor lock communicate via the DCW® bus.

ST 32 DCW®
The key switch to trigger the Night-/Bank function is suitable for application as activator outside the secured area (if you turn the key clockwise). When the key switch is used in conjunction with the DCW® program switch: the program switch is adjusted to OFF by turning the key counter-clockwise in order to deny access after closing of business or during work breaks. Turn the key to the right for more than 3 seconds in order to trigger the AUTOMATIC function.*

	Color	Order No.
ED Upgrade Card DCW® ED 100 & ED 250	yellow	29254001

* Depending on regional standards, provisions and regulations regarding the safeguarding of buildings, further measures to shut off the building may be required.

E-mail: info@fooktsuen.com Tel：3998-3721 Fax：3998-3723
Flat I, 12/F, Block 2, Kingswin Industrial Building, 32-40 Lei Muk Road, Kwai Chung, N.T.

Upgrade Card barrier-free toilet

With the aid of the Upgrade Card, the required special functions are allocated to the in- and outputs of the control unit to facilitate the connection of the respective components.

System overview
The system requires an electric strike, a motor lock or similar devices to keep the door closed. Furthermore, the door is equipped with a lever handle on the inside and a knob on the outside so that the door may only be opened from the inside and the outside with the corresponding key. In addition, large-surface pushbuttons are installed on the inside and on the outside of the toilet while a status indicator (vacant/occupied) on the outside and an occupied light indicator on the inside of the toilet indicate the current status. As an option, we provide an emergency pushbutton (to be mounted on the outside), which allows to open the door immediately in the event of an emergency.
Please note that dormakaba recommends connecting the barrier-free toilet to an additional emergency call system (by others).

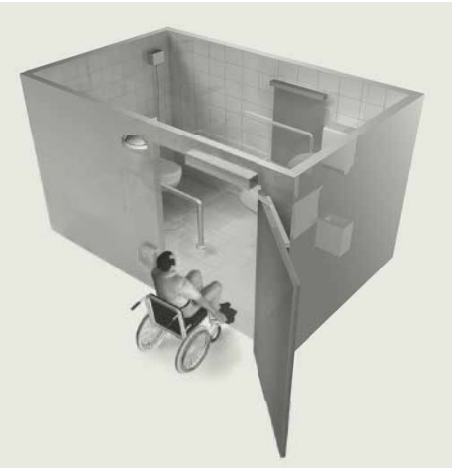

Entering the barrier-free toilet
While the toilet is vacant, the status indicator on the outside is green. Use the pushbutton on the outside to trigger an automatic opening cycle. The door will close automatically on expiry of the adjusted hold-open time. As soon as the door is fully closed, users may deactivate the external pushbutton via the pushbutton on the inside so that the door is no longer accessible from the outside. At the same time, the external status indicator switches from green to red in order to indicate that the toilet is occupied. Also the internal status indicator turns red to show the user inside the toilet that the door is now locked.

Leaving the barrier-free toilet
Users may open the door either automatically via the internal pushbutton or manually by using the lever handle. At the same time, the system emits a 24 V DC message, which may be used to flush the toilet automatically. The door closes on expiry of the adjusted hold-open time. The status indicator on the inside and on the outside switches from red to green as soon as the door has reached its "closed" position.

Emergency opening from the outside
The system is ready for connection of an emergency pushbutton so that, in the event of an emergency, users may deactivate the locking function and the door can only be opened by hand. In this case the door not longer operates automatically.
As an alternative, the door may be opened with the aid of a key from the outside (in the event of an emergency). In both cases, the status indicator on the outside switches from red to green and the light indicator on the inside goes out.

	Order No.
Upgrade Card Barrier-Free Toilet	29253002

福泉工程有限公司
FOOK TSUEN ENGINEERING LIMITED
E-mail: info@fooktsuen.com Tel：3998-3721 Fax：3998-3723
Flat I, 12/F, Block 2, Kingswin Industrial Building, 32-40 Lei Muk Road, Kwai Chung, N.T.

Hold open device application for fire doors

Functional characteristics

In the event of a fire, the ceiling-mounted or lintel-mounted smoke detectors detect emitted smoke and deactivate the automatic opening of the door. In this case, the operator will close the door via the integrated spring and can no longer open it automatically. Apart from the automatic activation via smoke detector, the system may also be triggered manually via the optional manual release pushbutton or when the door is closed by hand. In order to reactivate the system, the door has to be opened manually.

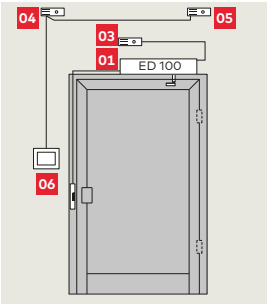

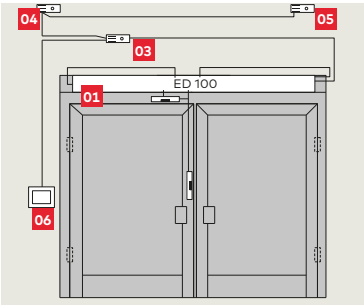

01 ED 100/ED 250
02 ED 100/ED 250 with continuous cover
03 RM-ED smoke detector with own casing or integrated

04 RM-N smoke detector, opposite hinge side
05 RM-N smoke detector, hinge side
06 Optional manual release pushbutton "Tür zu" (German for "close door")

RM-ED lintel-mounted smoke detector

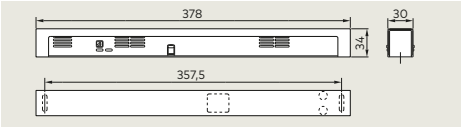

	Color	Order No.
RM-ED	silver	64840001
	white	64840011
	special color	64840009

Smoke detector RM integrated

	Color	Order No.
RM-ED integrated*		

RM-N ceiling-mounted smoke detector

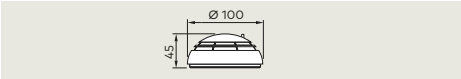

	Color	Order No.
2 x RM-N	white	64830900

HT manual release pushbutton

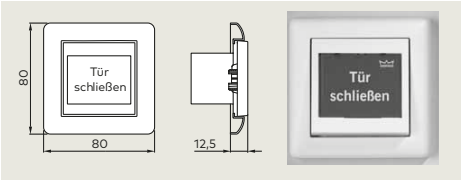

	Color	Order No.
Flush-mounted version	white	19144601175
Box for surface-mounting for HT (No picture)	white	05158533332

ESR – Integrated door coordinator

The ESR set is installed inside the double-leaf operator on site. It is available as individual component and easy to install. The system works similar to a drum brake and thereby ensures the proper functioning of the system. Its brake works on the motor shaft of the operator on the active door leaf and transfers the switching signal via a shaft. The system does not require any maintenance.

	Order No.
ED ESR set	29261001

*Components are included in cover, order no. please refer to page 14

E-mail: info@fooktsuen.com Tel：3998-3721 Fax：3998-3723
Flat I, 12/F, Block 2, Kingswin Industrial Building, 32-40 Lei Muk Road, Kwai Chung, N.T.

Wiring diagrams

ED 100 & ED 250 single doors

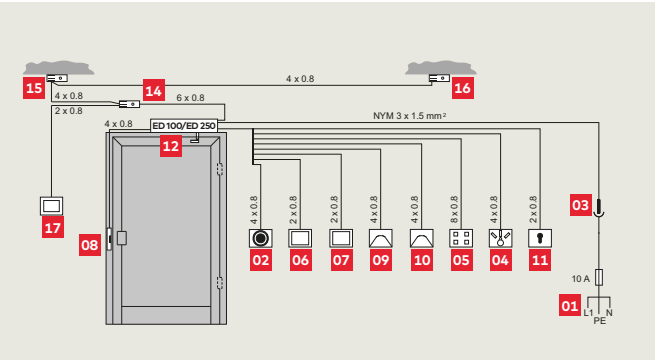

ED 100 & ED 250 double doors

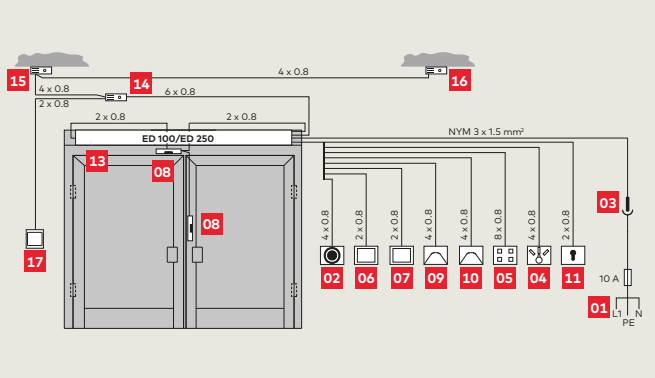

ED 100 & ED 250 single doors, barrier-free toilet

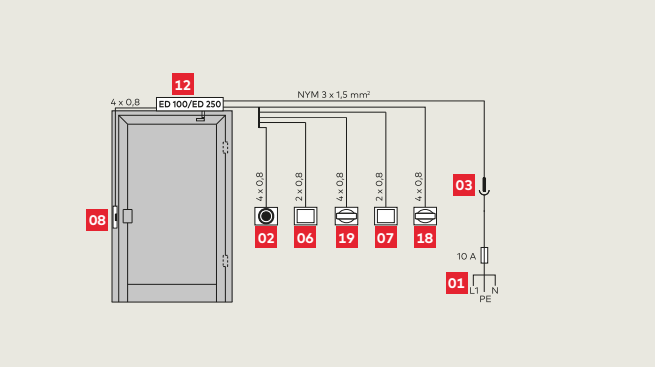

Connections

- **01** Power supply
- **02** Emergency pushbutton, function: Emergency Off
- **03** Two-pole-and-earth socket
- **04** External PGS, mechanical
- **05** External PGS, electronic
- **06** Pushbutton, inside
- **07** Pushbutton, outside
- **08** Locking device
- **09** Radar motion detector, inside
- **10** Radar motion detector, outside
- **11** Key switch
- **12** ED 100/ED 250
- **13** ED 100/ED 250 with continuous cover
- **14** RM-ED smoke detector*
- **15** RM-N smoke detector, opposite hinge side
- **16** RM-N smoke detector, hinge side
- **17** Optional manual release pushbutton "Tür zu" (German for "close door")
- **18** Red-green-display inside
- **19** Red-green display outside

*not necessary with integrated smoke detector

福泉工程有限公司 FOOK TSUEN ENGINEERING LIMITED
E-mail: info@fooktsuen.com Tel：3998-3721 Fax：3998-3723
Flat I, 12/F, Block 2, Kingswin Industrial Building, 32-40 Lei Muk Road, Kwai Chung, N.T.

Safety Sensors

Safety

Reversing

Stop

Safety sensors are contact-free protection devices which are mounted to the door panel and designed to monitor the swivel range. The sensors can detect static as well as moving objects and the automatic swing door operator reacts accordingly to prevent a collision with the object.

When the door closes and the sensor detects an object on the closing side (opposite hinge side), the door will reverse and open again. The hold-open time will start over. The sensor can also be used as an activator on the closing side. On the opening side (hinge side), the automatic opening movement will be stopped if the sensor detects an object. As soon as the set hold-open time has expired, the door will close again. There are sensors with various technologies available that can be connected to the automatic swing door operators ED 100 and ED 250.

Depending on the application, the automatic swing door operators ED 100 and ED 250 can be operated without safety sensors in the low-energy mode (low energy operation). However, safety sensors can additionally be used in the low energy mode if a contact with the door is not desired. Safety sensors have to be used in the full-energy mode.

E-mail: info@fooktsuen.com Tel：3998-3721 Fax：3998-3723
Flat I, 12/F, Block 2, Kingswin Industrial Building, 32-40 Lei Muk Road, Kwai Chung, N.T.

Safety sensors with infrared technology

The **Prosecure Opti Save** and **IRS-4** are safety sensors based on infrared technology to safeguard the swivel range of automated swing doors in accordance with DIN18650/EN16005.

The sensors are installed inside an aluminum profile in the upper area of the door. The resolution of the infrared sensors is typically 10 measurement points per meter of door width. Depending on the size of the door, a different number of sensors will be required. The maximum assembly height for Prosecure Opti Safe is 3.5m, for IRS 4 3.0 m, the maximum door panel width in each case is 1.6 m.

The detection field can be easily adjusted so that the grey zone in which the detection is no longer possible due to the physical limits of the technology does usually not exceed 20 cm. In case of infrared-optical sensors, the quality of the swivel range monitoring depends in each case on the characteristics of the floor. Both options allow you to guard both normal floors and floors with low reflectance, grates or dirt-trap mats that are usually difficult to detect.

If a door opens against a wall, the wall will be suppressed during the operation by the operator depending on the opening angle. If fixed installations such as handle bars are continuously within the detection range, the sensor modules must be adjusted so that the installed objects do not interfere with the detection.

A sufficient safeguarding of the swivel range can be achieved by adjusting the detection field. Depending on the risk potential that can be deduced from the risk assessment, the secondary closing edge must be protected by further measures.

Safety sensor Prosecure Opti Safe
incl. 2.5 m connecting cable and transition tube (dimensions: HxD 44 mm x 38 mm)

	Description	black	silver	white	special color
Prosecure Opti Safe 700	2 sensor bars with 1 transmitter & 1 receiver module each, length 700 mm	86501070	86502070	86505070	86504070
Prosecure Opti Safe 900	2 sensor bars with 1 transmitter & 1 receiver module each, length 900 mm	86501090	86502090	86505090	86504090
Prosecure Opti Safe 1200	2 sensor bars with 1 transmitter & 1 receiver module each, length 1200 mm	86501120	86502120	86505120	86504120
Prosecure Opti Safe 1600	2 sensor bars with 2 transmitters & 2 receiver modules each, length 1600 mm	86501160	86502160	86505160	86504160

Safety sensor IRS-4
incl. 2.5 m connecting cable and transition tube (dimensions: HxD 47 mm x 45 mm)

	Description	silver	white	special color
IRS-4 350	1 sensor bar with 1 combined transmitter / receiver module, length 350 mm	294350	294343	294351
IRS-4 1200	1 sensor bar with 2 combined transmitter / receiver modules, length 1200 mm	294110	294113	294111
IRS-4 1600	1 sensor bar with 3 combined transmitter / receiver modules, length 1600 mm	294160	294163	294161

E-mail: info@fooktsuen.com Tel：3998-3721 Fax：3998-3723
Flat I, 12/F, Block 2, Kingswin Industrial Building, 32-40 Lei Muk Road, Kwai Chung, N.T.

2.2 Electromagnetic Lock (EM Lock)

DORMA | EM Electromagnets

DORMA

Series 3000 N – Standard -

Intermediate Series meeting most of the middle range security needs. Recommended for the majority of internal doors with access control equipment, as they do not have to be resistant to heavy attacks.

- Single and swing door installation
- Symmetrical body for DIN-L / DIN-R reversible mounting
- Surface mounting or flush fitting solutions, depending on model
- Satin anodized aluminium housing
- High Quality surface treatment and corrosion proof
- No part be subject to mechanical wearing down
- Delivered with Armature Plate and fixing kit
- Monitored to control the real door status : Locked or Unlocked, depending on model
- Fail-safe security
- Dual voltage (12 / 24 V DC)
- First quality steel for no residual magnetism and holding, even after many years
- Metal Oxide Varistor surge protection
- Holding force : **300 Kg**

EM 3000 H
Surface mounting – unmonitored
Dual voltage power supply: 12 V DC / 24 V DC
Consumption: 500 mA / 250 mA
Size:
Body magnet (W x H x D): 268 x 48 x 26,5 mm
Armature plate (W x H x D): 185 x 38 x 12 mm

EM 3000 AH
Surface mounting – Monitoring relay dry contact + red/green LED
Dual voltage power supply: 12 V DC / 24 V DC
Consumption: 500 mA / 250 mA
Body magnet (W x H x D): 268 x 48 x 26,5 mm
Armature plate (W x H x D): 185 x 38 x 12 mm

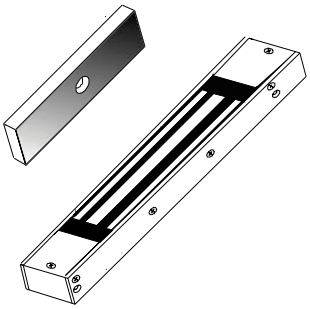

EM 3000 M
Mortise fitting – unmonitored
Dual voltage power supply: 12 V DC / 24 V DC
Consumption: 500 mA / 250 mA
Size, out of body mounting bracket:
Body magnet (W x H x D): 188 x 39 x 27 mm
Armature plate (W x H x D): 185 x 38 x 11 mm

EM 3000 AM
Mortise fitting – Monitoring by built in Reed contact
Dual voltage power supply: 12 V DC / 24 V DC
Consumption: 500 mA / 250 mA
Size, out of body mounting bracket:
Body magnet (W x H x D): 188 x 39 x 27 mm
Armature plate (W x H x D): 185 x 38 x 11 mm

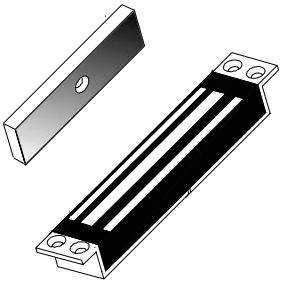

福泉工程有限公司 FOOK TSUEN ENGINEERING LIMITED
E-mail: info@fooktsuen.com Tel：3998-3721 Fax：3998-3723
Flat I, 12/F, Block 2, Kingswin Industrial Building, 32-40 Lei Muk Road, Kwai Chung, N.T.

Verriegelung EM sichtbare Montage

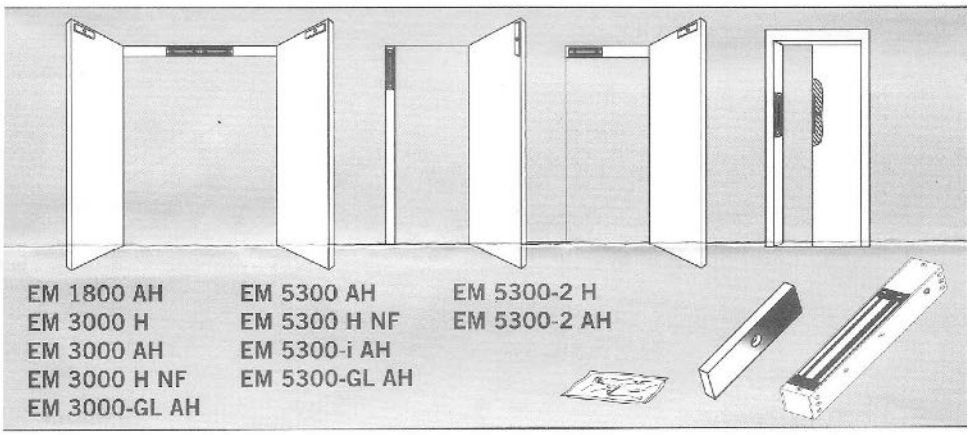

Wichtiger Hinweis
1. Die Leistung des Netzteils für den Elektromagneten muss ausreichend sein. Siehe Kabelplan
2. Das Netzteil sollte eine ausreichende Spannung liefern können
3. Die Gegenplatte und der Elektromagnet dürfen nicht gebohrt oder verändert werden

Important notice
1. The power supply has to be enough for the electromagnet. Look at wiring notice
2. The supply should be able to provide a sufficient voltage
3. The armature plate and the electromagnet should no be drilled or modified

Note importante
1. La tension d'alimentation doit être suffisante. Voir la notice de raccordement
2. L'alimentation doit fournir un courant suffisant
3. Ne jamais percer ni modifier le verrouillage EM ni la contre plaque

Montagebeispiele / Typical installation / Exemples d'installation

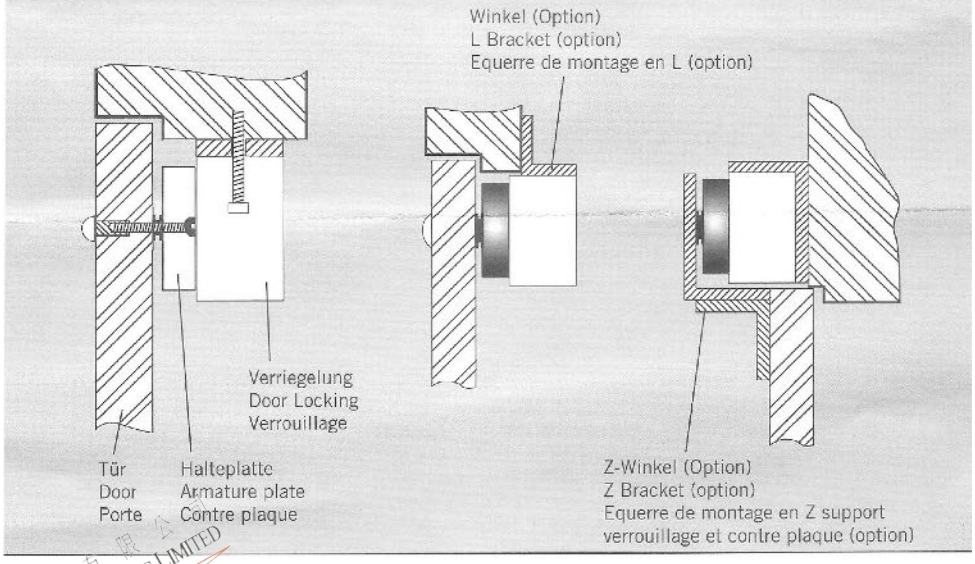

Radiation Protection (Lead Lined Door Serial)

DORMA | Verriegelung EM sichtbare Montage

Montage der Halteplatte
Mounting of the armature plate
Pose de la contre plaque

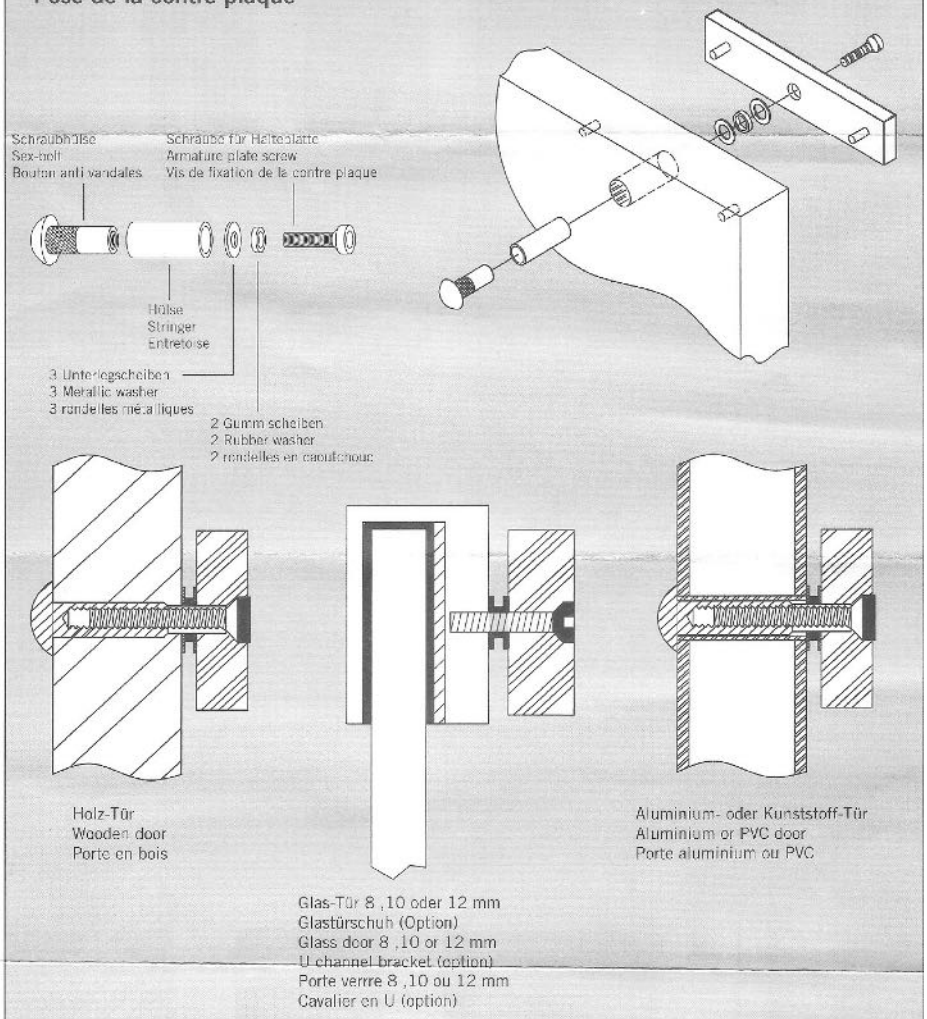

Sous réserve de modifications

Die Halteplatte sollte wie oben gezeigt montiert werden.
Die Befestigungsschraube nicht zu stark anziehen. Die Halteplatte muss beweglich bleiben.
The armature plate should be mounted as shown above.
Do not over-tighten the central screw. The plate must remain flexible.
La contre plaque doit être montée selon les dessins ci-dessous.
Ne pas serrer trop fort la vis centrale afin que la plaque reste souple.

DORMA GmbH + Co.KG
DORMA Platz 1 D-58256 Ennepetal • Tel. +49 (0) 23 33 / 793-0 • www.dorma.com
Postfach 40 09 D-58247 Ennepetal • Fax +49 (0) 23 33 / 79 34 95

Radiation Protection (Lead Lined Door Serial)

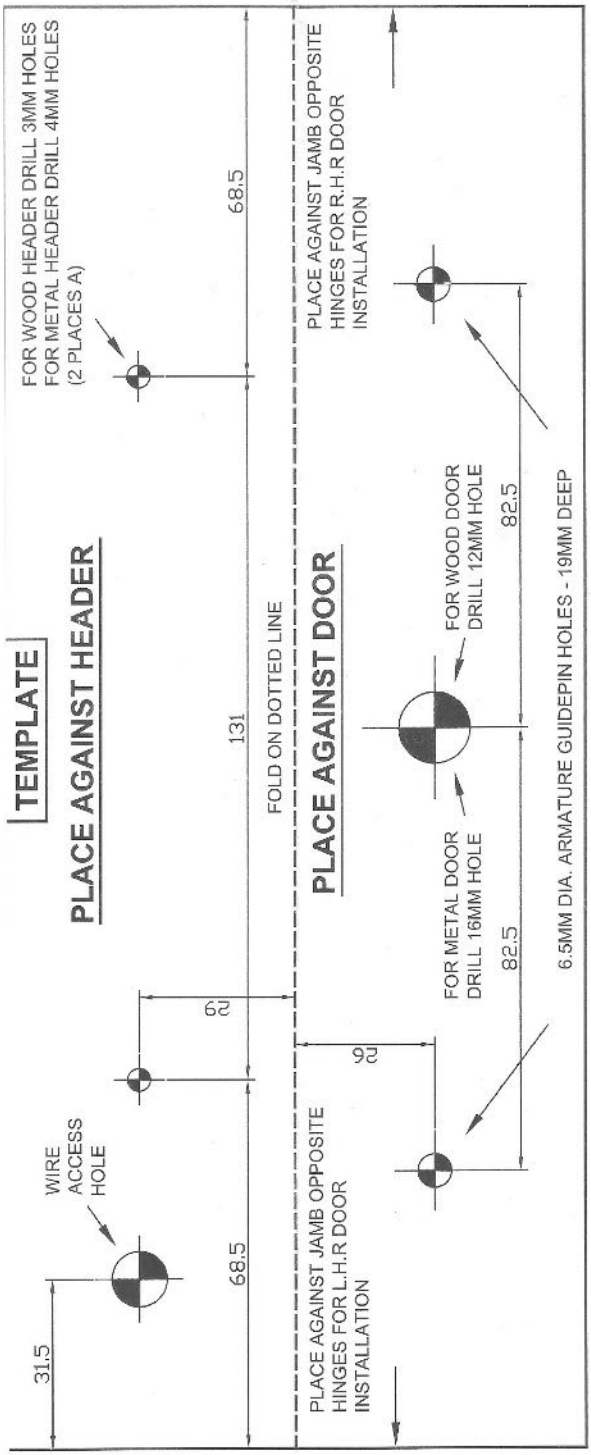

MOUNTING INSTRUCTIONS

STEP 1- FOLD TEMPLATE ALONG DOTTED LINE.
PLACE TEMPLATE AGAINST DOOR AND HEAD FRAME.
DRILL 3 HOLES FOR DOOR AND 2 HOLES FOR HEAD FRAME AS INDICATED ON THE TEMPLATE.

STEP 2- MOUNT THE ARMATURE PLATE TO THE DOOR USING 1 RUBBER WASHER SANDWICHED BETWEEN 2 STEEL WASHERS. (THE RUBBER WASHER AND 2 STEEL WASHERS ARE INSTALLED ON THE THROUGH BOLT BETWEEN THE ARMATURE PLATE AND DOOR).

NOTE: DO NOT TIGHTEN THE ARMATURE PLATE TIGHT AGAINST THE DOOR. THE ARMATURE PLATE MUST REMAIN MOVABLE TO ALLOW SURFACE ALIGNMENT WITH THE MAGNET FACE.

STEP 3- INSTALL THE MOUNTING BRACKET WITH 2 ROUND HEAD SCREWS (THE 2 ROUND HEAD SCREWS ARE INSTALLED IN THE SLOTTED HOLES FOR ADJUSTMENT AND WILL BE REMOVED BEFORE THE MAGNET IS INSTALLED).

ADJUST THE MOUNTING BRACKET SO THAT IT AND THE ARMATURE PLATE FORM A RIGHT ANGLE.
USING THE MOUNTING BRACKET AS A TEMPLATE, DRILL THE 10MM WIRE HOLE.
DRILL AND INSTALL THE REMAINING MOUNTING SCREWS, REMOVE THE 2 ROUND HEAD SCREWS AND DISCARD.

STEP 4- INSTALL MAGNET TO MOUNTING BRACKET WITH 2 CAP SCREWS SUPPLIED.

STEP 5- INSTALL ELECTRICAL WIRING PER INSTRUCTION SHEET.

STEP 6- INSERT ALUMINUM SCREW COVERS ON CAP SCREW HOLES.

Paper templates might distort due to air moisture.
Only the indicated measurements are therefore obligatory.

2.3 Emergency Break Glass

Dimensions	86Lx86Wx50H(mm)
Standard Structure	Fireproof Material, Easy to install
Current Rating	3A/ 36VDC Max
Output contact	NO/NC/COM
Suitable for Door	100000 tested
Suitable for door	Exit Door, Emergence Door
Aptional Accessories	Glass, Cover
Operating temp	10～+55 (14-131F)
Operating humidity	0-95% (relative humidity)
Material Selection	Fireproof Material, Sandblast Finished
Color	Green
Weight	200g

2.4 Microwave Door Sensor

MWS-201

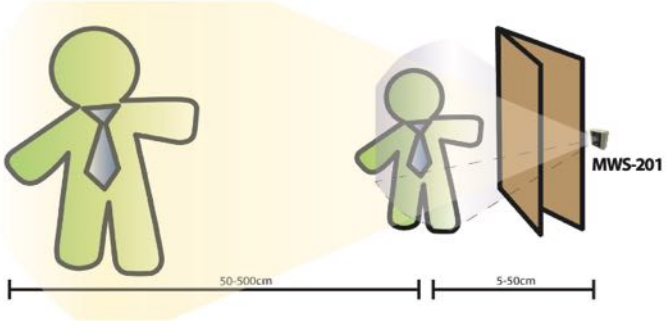

- Plastic Faceplate
- Wall or Ceiling Mount
- Adjustable Relock Timer
- Adjustable Sensor Range
- Contact Rated: 1 N.C. 1 N.O., DC 30V /3A or AC 120V
- Power Input: DC 12V
- Dimension: 86 (W) x 86 (H) x 30 (D) mm

E-mail: info@fooktsuen.com Tel：3998-3721 Fax：3998-3723
Flat I, 12/F, Block 2, Kingswin Industrial Building, 32-40 Lei Muk Road, Kwai Chung, N.T.

3. Lead Lined Door Finishing

E-mail: info@fooktsuen.com Tel：3998-3721 Fax：3998-3723
Flat I, 12/F, Block 2, Kingswin Industrial Building, 32-40 Lei Muk Road, Kwai Chung, N.T.

Radiation Protection (Lead Lined Door Serial)

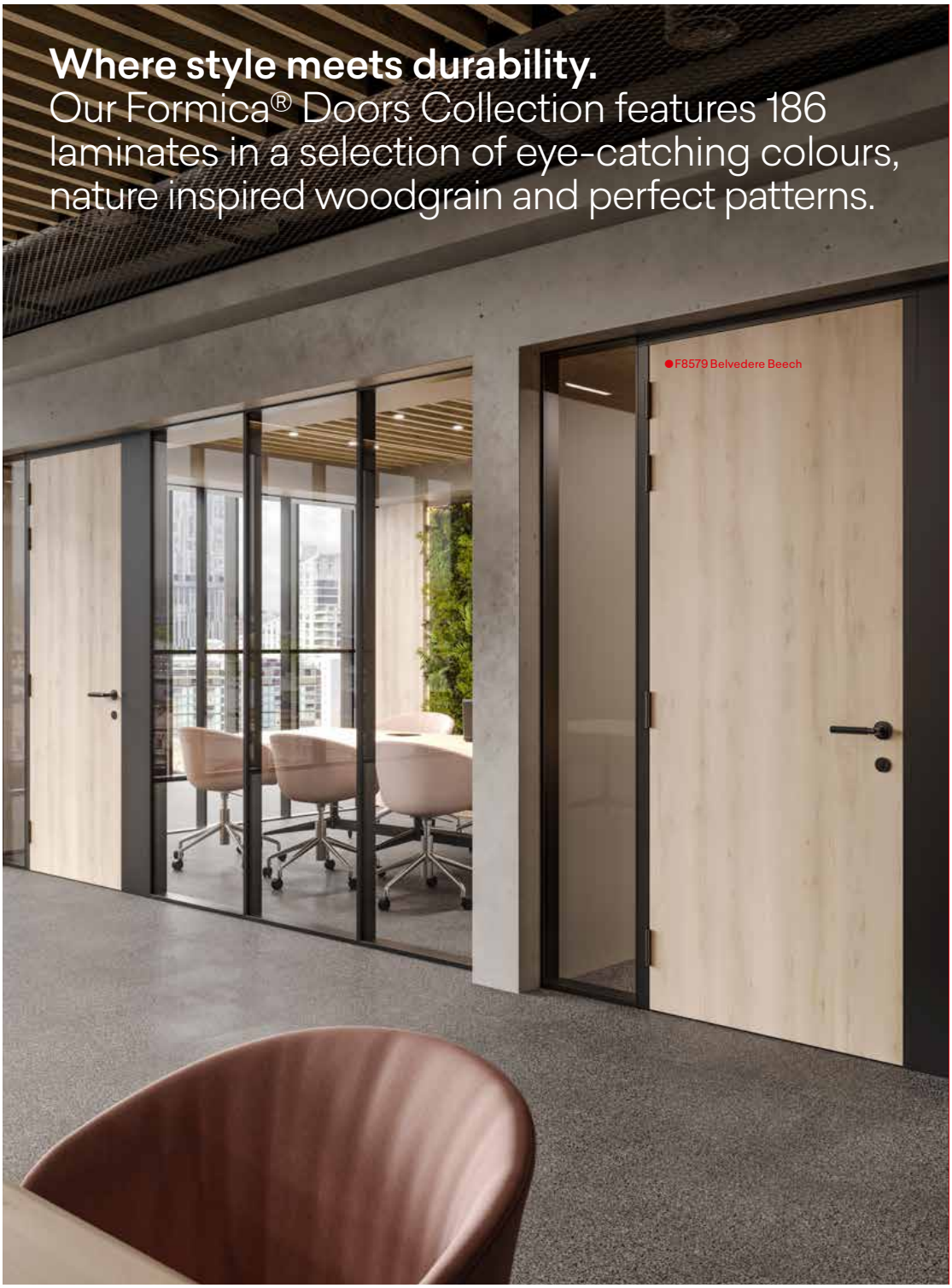

福泉工程有限公司
FOOK TSUEN ENGINEERING LIMITED
E-mail: info@fooktsuen.com Tel：3998-3721 Fax：3998-3723
Flat I, 12/F, Block 2, Kingswin Industrial Building, 32-40 Lei Muk Road, Kwai Chung, N.T.

Radiation Protection (Lead Lined Door Serial)

Colors

F0949 MAT White	F7459 MAT Brite White	F2696 MAT Super White	F2255 MAT Polar White	F1093 MAT Aries	F2001 MAT Baikal
F3091 MAT Crystal White	F2274 MAT Blanc Polaire	F2010 MAT Malibu	F7927 MAT Folkestone	F7923 MAT Surf	F2791 MAT Silver
F7938 MAT Glacier	F1484 MAT Steel	F1994 MAT Fox	F7961 MAT Fog	F7902 MAT Iron	F7858 MAT Pumice
F0189 MAT Sparta	F7924 MAT Lead	F1535 MAT Tornado	F7928 MAT Mouse	F2770 MAT Sarum Grey	F3202 MAT Otter
F7912 MAT Storm	F2297 MAT Terril	F7837 MAT Graphite	F2253 MAT Diamond Black	F9266 MAT Citadel	F5342 MAT Earth
F3210 MAT Levante	F5348 MAT Energy	F8238 MAT Blush	F8858 MAT Just Rose	F0233 MAT Heather	F7880 MAT Thistle
F2962 MAT Clementine	F1238 MAT Carnaval	F8141 MAT Adobe	F0232 MAT Juicy Pink	F2582 MAT Lilac	F1019 MAT Azur
F2824 MAT Blaze Red	F7845 MAT Spectrum Red	F8140 MAT Brick	F6907 MAT Amarena	F0231 MAT Peaceful Blue	F2828 MAT Tropical Blue
F6902 MAT Grenadine	F0188 MAT Beaujolais	F8239 MAT Henna	F5345 MAT Viola	F7851 MAT Spectrum Blue	F2483 MAT Ultramarine
F2005 MAT Paprika	F7966 MAT New Burgundy	F8243 MAT Night Shade	F6903 MAT Cassis	F5323 MAT Nocturne	F8242 MAT Night Sea

E-mail: info@fooktsuen.com Tel：3998-3721 Fax：3998-3723
Flat I, 12/F, Block 2, Kingswin Industrial Building, 32-40 Lei Muk Road, Kwai Chung, N.T.

Radiation Protection (Lead Lined Door Serial)

F7949 MAT Soft White	F1534 MAT Magnolia	F1192 MAT Porcelana	F1040 MAT Alpino	F7932 MAT Antique White	F2273 MAT Seringa
F1531 MAT Irish Cream	F7934 MAT Pearl	F0547 MAT Papyrus	F2296 MAT Sno White	F2833 MAT Sandstone	F7882 MAT Pale Gold
F3050 MAT Cygnet	F7929 MAT Oyster Grey	F1803 MAT Tenere	F8857 MAT Just Gold	F7940 MAT Spectrum Yellow	F4155 MAT Sun
F8751 MAT Mojave	F0187 MAT Kashmir	F0903 MAT Cafe	F1485 MAT Chrome Yellow	F3209 MAT Sol	F4161 MAT Terracotta
F2200 MAT Dark Chocolate	F8241 MAT Earthenware	F0800 MAT Artichoke	F3236 MAT Avocado	F3007 MAT Pale Olive	F8820 MAT Leaf Green
F1194 MAT Iris	F5493 MAT Arctic Blue	F2966 MAT Opal	F7853 MAT Ocean Grey	F5344 MAT Seed	F5343 MAT Possum
F8821 MAT Just Blue	F1998 MAT Oslo	F5349 MAT Fossil	F8245 MAT Marble Green	F4177 MAT Lime	F8755 MAT Lemon
F8240 MAT Liquid Glass	F5347 MAT Maui	F7879 MAT Dusty Jade	F6901 MAT Vibrant Green	F5341 MAT Wasabi	F7897 MAT Spectrum Green
F7884 MAT China Blue	F4172 MAT Caribbean	F1326 MAT Capri	F5521 MAT Deep Sea	F8796 MAT Algae	F8237 MAT Fir
F8822 MAT Denim	F7914 MAT Marine Blue	F7846 MAT Grotto	F2478 MAT Bermuda	F8793 MAT Green Slate	F8244 MAT Night Forest

E-mail: info@fooktsuen.com Tel：3998-3721 Fax：3998-3723
Flat I, 12/F, Block 2, Kingswin Industrial Building, 32-40 Lei Muk Road, Kwai Chung, N.T.

Radiation Protection (Lead Lined Door Serial)

Colors with Wood finish

F0949 White NAT	F1040 Alpino NAT	F7912 Storm NAT	F2253 Diamond Black NAT
F0949 White LNW	F1040 Alpino LNW	F7912 Storm LNW	F2253 Diamond Black LNW

Woods

F8576 Blond Cedar MAT	F1004 Pale Ash NAT	F8579 Belvedere Beech NAT	F1549 Tromso Maple MAT
F8841 White Ash MAT	F8843 Natural Ash MAT	F3855 Clear Maple MAT	F2726 Natural Beech MAT
F0190 Finn Beech MAT	F8910 Raw Birchply NAT	F8585 Evergreen Oak LNW	F8844 Aged Ash NAT
F7921 Birch MAT	F6930 Natural Cane NAT	F5374 Elegant Oak MAT	F5374 Elegant Oak NAT
F6149 Light Oak MAT	F5486 Classic Walnut MAT	F2884 Vosges Pear MAT	F1293 Redwood MAT
F5883 Pecan Woodline MAT	F5372 Vintage Wood MAT	F8853 Rural Oak PGN	F5887 Millennium Oak PGN
F7603 Bio-Oak MAT	F1079 Natural Oak NAT	F5370 Ivory Oak Cross MAT	F5483 Mocca Firwood LNW

福泉工程有限公司
FOOK TSUEN ENGINEERING LIMITED
E-mail: info@fooktsuen.com Tel：3998-3721 Fax：3998-3723
Flat I, 12/F, Block 2, Kingswin Industrial Building, 32-40 Lei Muk Road, Kwai Chung, N.T.

Radiation Protection (Lead Lined Door Serial)

Patterns

F0193 MAT
Xenon

F3735 MAT
Krypton

F5583 MAT
Steel Metal

F8859 MAT
Vintage Brush

F3734 MAT
Radon

Woods

F8583 NAT
Carpentry Oak

F5782 NAT
Formal Walnut

F6932 MAT
Macchiato Walnut

F8847 MAT
Jarrah Legno

F9012 NAT
Ebony

F5373 MAT
Nocturne Wood

F8589 PGN
Tula Oak

F5872 NAT
Refined Walnut

F8586 MAT
Cetina Walnut

F8587 MAT
Peruca Walnut

F8588 MAT
Nevada Oak

F8588 PGN
Nevada Oak

F5873 NAT
Ventura Oak

F8575 NAT
Dark Ash

F1548 MAT
Mocha Cedar

F1547 MAT
Noir Cedar

F8839 MAT
Ashen Ribbonwood

F8006 MAT
Avignon Walnut

F0873 MAT
Ebony Ribbonwood

F8848 NAT
Blackened Legno

F5477 MAT
Ebony Oak Cross

F5488 NAT
Smoky Brown Pear

F8851 LNW
Classic Wenge

F8552 NAT
Black Birchply

F1614 MAT
Punga Punga Wood

visit formica.com to view full sheet layouts

E-mail: info@fooktsuen.com Tel：3998-3721 Fax：3998-3723
Flat I, 12/F, Block 2, Kingswin Industrial Building, 32-40 Lei Muk Road, Kwai Chung, N.T.

Radiation Protection (Lead Lined Door Serial)

Doors Collection

						Sheet size (mm)			
						3050x1300	2150x950	2350x950	2350x1300
Code	Decor	Range	NCS®	RAL Classic	LRV	Grade: HGP, CGS	Grade: HGS, CGS	Grade: HGS, CGS	Grade: HGS, CGS
F0187	Kashmir	Colors	S 5010-Y30R	-	25.6	MAT	MAT	MAT	MAT
F0188	Beaujolais	Colors	S 3060-R	3003	12.0	MAT	MAT	MAT	MAT
F0189	Sparta	Colors	S 3502-B	7040	38.0	MAT	MAT	MAT	MAT
F0190	Finn Beech	Woods	-	-	40.8	MAT	MAT	MAT	MAT
F0193	Xenon	Patterns	-	-	47.2	MAT	MAT	MAT	MAT
F0231	Peaceful Blue	Colors	S 1030-R80B	-	55.7	MAT	MAT	MAT	MAT
F0232	Juicy Pink	Colors	S 1060-R20B	4003	23.7	MAT	MAT	MAT	MAT
F0233	Heather	Colors	S 2030-R50B	-	44.8	MAT	MAT	MAT	MAT
F0547	Papyrus	Colors	S 1010-Y20R	1015	77.5	MAT	MAT	MAT	MAT
F0800	Artichoke	Colors	S 2030-G90Y	1000	48.6	MAT	MAT	MAT	MAT
F0873	Ebony Ribbonwood	Woods	-	-	9.1	MAT	MAT	MAT	MAT
F0903	Cafe	Colors	S 3020-Y20R	-	39.0	MAT	MAT	MAT	MAT
F0949	White	Colors	S 0502-R50B	9003	81.5	MAT	MAT	MAT	MAT
F0949	White	Colors/ Wood finish	S 0502-R50B	9003	81.5	LNW	LNW	LNW	LNW
F0949	White	Colors/ Wood finish	S 0502-R50B	9003	81.5	NAT	NAT	NAT	NAT
F1004	Pale Ash	Woods	-	-	62.1	NAT	NAT	NAT	NAT
F1019	Azur	Colors	S 2040-R80B	-	36.7	MAT	MAT	MAT	MAT
F1040	Alpino	Colors	S 0502-G50Y	9010	86.9	MAT	MAT	MAT	MAT
F1040	Alpino	Colors/ Wood finish	S 0502-G50Y	9010	86.9	LNW	LNW	LNW	LNW
F1040	Alpino	Colors/ Wood finish	S 0502-G50Y	9010	86.9	NAT	NAT	NAT	NAT
F1079	Natural Oak	Woods	-	-	49.0	NAT	NAT	NAT	NAT
F1093	Aries	Colors	S 1500-N	7047	66.2	MAT	MAT	MAT	MAT
F1192	Porcelana	Colors	S 0505-Y20R	1013	81.4	MAT	MAT	MAT	MAT
F1194	Iris	Colors	S 1020-R90B	-	63.3	MAT	MAT	MAT	MAT
F1238	Carnaval	Colors	S 1580-Y90R	3001, 3020	15.7	MAT	MAT	MAT	MAT
F1293	Redwood	Woods	-	-	12.7	MAT	MAT	MAT	MAT
F1326	Capri	Colors	S 3030-B70G	-	31.2	MAT	MAT	MAT	MAT
F1484	Steel	Colors	S 3005-R80B	7040	42.6	MAT	MAT	MAT	MAT
F1485	Chrome Yellow	Colors	S 1060-Y	1018	65.6	MAT	MAT	MAT	MAT
F1531	Irish Cream	Colors	S 1005-Y50R	-	74.2	MAT	MAT	MAT	MAT
F1534	Magnolia	Colors	S 0502-Y50R	9001	78.3	MAT	MAT	MAT	MAT
F1535	Tornado	Colors	S 4500-N	7036	32.3	MAT	MAT	MAT	MAT
F1547	Noir Cedar	Woods	-	-	10.3	MAT	MAT	MAT	MAT
F1548	Mocha Cedar	Woods	-	-	28.8	MAT	MAT	MAT	MAT
F1549	Tromso Maple	Woods	-	-	54.9	MAT	MAT	MAT	MAT
F1614	Punga Punga Wood	Woods	-	-	8.0	MAT	MAT	MAT	MAT
F1803	Tenere	Colors	S 1040-Y10R	-	63.0	MAT	MAT	MAT	MAT
F1994	Fox	Colors	S 3500-N	7004	42.4	MAT	MAT	MAT	MAT
F1998	Oslo	Colors	S 3020-B	-	33.9	MAT	MAT	MAT	MAT
F2001	Baikal	Colors	S 1502-Y	9002	67.6	MAT	MAT	MAT	MAT
F2005	Paprika	Colors	S 4050-Y80R	-	12.7	MAT	MAT	MAT	MAT
F2010	Malibu	Colors	S 1000-N	-	77.7	MAT	MAT	MAT	MAT
F2200	Dark Chocolate	Colors	S 8005-Y80R	8017, 8019	9.0	MAT	MAT	MAT	MAT
F2253	Diamond Black	Colors	S 9000-N	9011	6.7	MAT	MAT	MAT	MAT
F2253	Diamond Black	Colors/ Wood finish	S 9000-N	9011	6.7	LNW	LNW	LNW	LNW
F2253	Diamond Black	Colors/ Wood finish	S 9000-N	9011	6.7	NAT	NAT	NAT	NAT
F2255	Polar White	Colors	S 0500-N	9016	85.7	MAT	MAT	MAT	MAT
F2273	Seringa	Colors	S 1010-Y30R	1015	70.7	MAT	MAT	MAT	MAT
F2274	Blanc Polaire	Colors	S 0502-B	9003	82.8	MAT	MAT	MAT	MAT
F2296	Sno White	Colors	S 0502-Y	9010	85.8	MAT	MAT	MAT	MAT
F2297	Terril	Colors	S 7502-B	7016	9.6	MAT	MAT	MAT	MAT
F2478	Bermuda	Colors	S 3050-B30G	5021	20.2	MAT	MAT	MAT	MAT
F2483	Ultramarine	Colors	S 4550-R70B	5022	9.3	MAT	MAT	MAT	MAT
F2582	Lilac	Colors	S 1020-R70B	-	59.7	MAT	MAT	MAT	MAT
F2696	Super White	Colors	S 0505-R70B	-	81.2	MAT	MAT	MAT	MAT
F2726	Natural Beech	Woods	-	-	55.5	MAT	MAT	MAT	MAT
F2770	Sarum Grey	Colors	S 4502-Y	7036	30.5	MAT	MAT	MAT	MAT
F2791	Silver	Colors	S 1002-Y	9002	68.9	MAT	MAT	MAT	MAT
F2824	Blaze Red	Colors	S 1080-Y80R	2002	20.4	MAT	MAT	MAT	MAT
F2828	Tropical Blue	Colors	S 3060-R90B	-	18.3	MAT	MAT	MAT	MAT
F2833	Sandstone	Colors	S 2010-Y30R	-	57.8	MAT	MAT	MAT	MAT
F2884	Vosges Pear	Woods	-	-	25.2	MAT	MAT	MAT	MAT
F2962	Clementine	Colors	S 1080-Y70R	2004, 2009	26.2	MAT	MAT	MAT	MAT
F2966	Opal	Colors	S 1010-G10Y	-	66.6	MAT	MAT	MAT	MAT
F3007	Pale Olive	Colors	S 3020-G60Y	-	39.5	MAT	MAT	MAT	MAT
F3050	Cygnet	Colors	S 2005-Y40R	-	59.3	MAT	MAT	MAT	MAT
F3091	Crystal White	Colors	S 0300-N	9016	88.8	MAT	MAT	MAT	MAT
F3202	Otter	Colors	S 4005-Y20R	1019	34.4	MAT	MAT	MAT	MAT
F3209	Sol	Colors	S 0560-Y20R	1017	56.1	MAT	MAT	MAT	MAT
F3210	Levante	Colors	S 1070-Y40R	2011	37.1	MAT	MAT	MAT	MAT
F3236	Avocado	Colors	S 0530-G50Y	-	73.8	MAT	MAT	MAT	MAT
F3734	Radon	Patterns	-	-	18.7	MAT	MAT	MAT	MAT
F3735	Krypton	Patterns	-	-	35.3	MAT	MAT	MAT	MAT
F3855	Clear Maple	Woods	-	-	52.2	MAT	MAT	MAT	MAT
F4155	Sun	Colors	S 0580-Y30R	1028	49.7	MAT	MAT	MAT	MAT
F4161	Terracotta	Colors	S 3040-Y60R	-	27.9	MAT	MAT	MAT	MAT
F4172	Caribbean	Colors	S 2050-B20G	-	35.2	MAT	MAT	MAT	MAT
F4177	Lime	Colors	S 1040-G50Y	-	56.6	MAT	MAT	MAT	MAT
F5323	Nocturne	Colors	S 8010-R70B	5004	6.5	MAT	MAT	MAT	MAT
F5341	Wasabi	Colors	S 2040-G80Y	-	49.8	MAT	MAT	MAT	MAT
F5342	Earth	Colors	S 6005-Y20R	7006	20.0	MAT	MAT	MAT	MAT
F5343	Possum	Colors	S 5005-G80Y	7034	27.3	MAT	MAT	MAT	MAT
F5344	Seed	Colors	S 3005-G80Y	7032	46.7	MAT	MAT	MAT	MAT
F5345	Viola	Colors	S 5040-R30B	4004	9.6	MAT	MAT	MAT	MAT
F5347	Maui	Colors	S 2030-B30G	6027	42.1	MAT	MAT	MAT	MAT
F5348	Energy	Colors	S 1070-Y90R	3017	23.9	MAT	MAT	MAT	MAT
F5349	Fossil	Colors	S 3005-B80G	-	42.9	MAT	MAT	MAT	MAT
F5370	Ivory Oak Cross	Woods	-	-	43.8	MAT	MAT	MAT	MAT
F5372	Vintage Wood	Woods	-	-	25.2	MAT	MAT	MAT	MAT
F5373	Nocturne Wood	Woods	-	-	14.7	MAT	MAT	MAT	MAT
F5374	Elegant Oak	Woods	-	-	35.0	MAT	MAT	MAT	MAT
F5374	Elegant Oak	Woods	-	-	35.0	NAT	NAT	NAT	NAT
F5477	Ebony Oak Cross	Woods	-	-	11.4	MAT	MAT	MAT	MAT

E-mail: info@fooktsuen.com Tel：3998-3721 Fax：3998-3723
Flat I, 12/F, Block 2, Kingswin Industrial Building, 32-40 Lei Muk Road, Kwai Chung, N.T.

Radiation Protection (Lead Lined Door Serial)

Doors Collection

						Sheet size (mm)			
						3050x1300	2150x950	2350x950	2350x1300
Code	**Decor**	**Range**	**NCS®**	**RAL Classic**	**LRV**	Grade: **HGP, CGS**	Grade: **HGS, CGS**	Grade: **HGS, CGS**	Grade: **HGS, CGS**
F5483	**Mocca Firwood**	Woods	-	-	32.0	LNW	LNW	LNW	LNW
F5486	**Classic Walnut**	Woods	-	-	30.5	MAT	MAT	MAT	MAT
F5488	**Smoky Brown Pear**	Woods	-	-	14.8	NAT	NAT	NAT	NAT
F5493	**Arctic Blue**	Colors	S 0510-R90B	-	71.8	MAT	MAT	MAT	MAT
F5521	**Deep Sea**	Colors	S 6020-B10G	-	10.1	MAT	MAT	MAT	MAT
F5583	**Steel Metal**	Patterns	-	-	22.9	MAT	MAT	MAT	MAT
F5782	**Formal Walnut**	Woods	-	-	16.1	NAT	NAT	NAT	NAT
F5872	**Refined Walnut**	Woods	-	-	11.0	NAT	NAT	NAT	NAT
F5873	**Ventura Oak**	Woods	-	-	32.4	NAT	NAT	NAT	NAT
F5883	**Pecan Woodline**	Woods	-	-	27.4	MAT	MAT	MAT	MAT
F5887	**Millennium Oak**	Woods	-	-	26.7	PGN	PGN	PGN	PGN
F6149	**Light Oak**	Woods	-	-	29.0	MAT	MAT	MAT	MAT
F6901	**Vibrant Green**	Colors	S 2060-G30Y	6018	32.1	MAT	MAT	MAT	MAT
F6902	**Grenadine**	Colors	S 3060-Y80R	3016	16.2	MAT	MAT	MAT	MAT
F6903	**Cassis**	Colors	S 6030-R50B	-	9.8	MAT	MAT	MAT	MAT
F6907	**Amarena**	Colors	S 3050-R30B	4006	14.3	MAT	MAT	MAT	MAT
F6930	**Natural Cane**	Woods	-	-	49.1	NAT	NAT	NAT	NAT
F6932	**Macchiato Walnut**	Woods	-	-	15.8	MAT	MAT	MAT	MAT
F7459	**Brite White**	Colors	S 0502-B	9003	78.7	MAT	MAT	MAT	MAT
F7603	**Bio-Oak**	Woods	-	-	43.0	MAT	MAT	MAT	MAT
F7837	**Graphite**	Colors	S 8000-N	7022, 8019	10.8	MAT	MAT	MAT	MAT
F7845	**Spectrum Red**	Colors	S 2070-R	3001	15.9	MAT	MAT	MAT	MAT
F7846	**Grotto**	Colors	S 5030-B10G	-	18.3	MAT	MAT	MAT	MAT
F7851	**Spectrum Blue**	Colors	S 3060-R80B	-	13.4	MAT	MAT	MAT	MAT
F7853	**Ocean Grey**	Colors	S 3010-G20Y	-	37.0	MAT	MAT	MAT	MAT
F7858	**Pumice**	Colors	S 2005-Y20R	-	60.0	MAT	MAT	MAT	MAT
F7879	**Dusty Jade**	Colors	S 3020-B50G	-	42.5	MAT	MAT	MAT	MAT
F7880	**Thistle**	Colors	S 3010-R80B	-	39.5	MAT	MAT	MAT	MAT
F7882	**Pale Gold**	Colors	S 1020-Y	-	71.2	MAT	MAT	MAT	MAT
F7884	**China Blue**	Colors	S 3020-R90B	-	34.7	MAT	MAT	MAT	MAT
F7897	**Spectrum Green**	Colors	S 3050-G	6024	20.3	MAT	MAT	MAT	MAT
F7902	**Iron**	Colors	S 3502-Y	7038, 7044	43.9	MAT	MAT	MAT	MAT
F7912	**Storm**	Colors	S 6502-B	7015	14.8	MAT	MAT	MAT	MAT
F7912	**Storm**	Colors/ Wood finish	S 6502-B	7015	14.8	LNW	LNW	LNW	LNW
F7912	**Storm**	Colors/ Wood finish	S 6502-B	7015	14.8	NAT	NAT	NAT	NAT
F7914	**Marine Blue**	Colors	S 6030-R80B	5003	9.2	MAT	MAT	MAT	MAT
F7921	**Birch**	Woods	-	-	52.2	MAT	MAT	MAT	MAT
F7923	**Surf**	Colors	S 1502-Y	9002	69.4	MAT	MAT	MAT	MAT
F7924	**Lead**	Colors	S 5010-R90B	7046	25.4	MAT	MAT	MAT	MAT
F7927	**Folkestone**	Colors	S 2500-N	7035	53.5	MAT	MAT	MAT	MAT
F7928	**Mouse**	Colors	S 5000-N	7037	25.0	MAT	MAT	MAT	MAT
F7929	**Oyster Grey**	Colors	S 2005-Y50R	-	48.1	MAT	MAT	MAT	MAT
F7932	**Antique White**	Colors	S 0804-Y30R	9001	81.6	MAT	MAT	MAT	MAT
F7934	**Pearl**	Colors	S 1002-Y	9001	73.7	MAT	MAT	MAT	MAT
F7938	**Glacier**	Colors	S 1502-B	-	63.9	MAT	MAT	MAT	MAT
F7940	**Spectrum Yellow**	Colors	S 1070-Y10R	1023	54.5	MAT	MAT	MAT	MAT
F7949	**Soft White**	Colors	S 0500-N	9016	86.2	MAT	MAT	MAT	MAT
F7961	**Fog**	Colors	S 4000-N	7004, 7036	37.0	MAT	MAT	MAT	MAT
F7966	**New Burgundy**	Colors	S 5040-R	3004	9.8	MAT	MAT	MAT	MAT
F8006	**Avignon Walnut**	Woods	-	-	35.4	MAT	MAT	MAT	MAT
F8140	**Brick**	Colors	S 5030-Y70R	8004	16.9	MAT	MAT	MAT	MAT
F8141	**Adobe**	Colors	S 4030-Y70R	-	23.2	MAT	MAT	MAT	MAT
F8237	**Fir**	Colors	S 6020-G10Y	-	14.2	MAT	MAT	MAT	MAT
F8238	**Blush**	Colors	S 3020-Y90R	-	31.9	MAT	MAT	MAT	MAT
F8239	**Henna**	Colors	S 6020-Y80R	8002	13.7	MAT	MAT	MAT	MAT
F8240	**Liquid Glass**	Colors	S 2005-B20G	-	56.4	MAT	MAT	MAT	MAT
F8241	**Earthenware**	Colors	S 3030-Y50R	-	30.6	MAT	MAT	MAT	MAT
F8242	**Night Sea**	Colors	S 7020-R90B	-	8.4	MAT	MAT	MAT	MAT
F8243	**Night Shade**	Colors	S 8010-R10B	-	7.2	MAT	MAT	MAT	MAT
F8244	**Night Forest**	Colors	S 8010-B30G	6012	7.9	MAT	MAT	MAT	MAT
F8245	**Marble Green**	Colors	S 4020-G10Y	-	27.7	MAT	MAT	MAT	MAT
F8552	**Black Birchply**	Woods	-	-	8.8	NAT	NAT	NAT	NAT
F8575	**Dark Ash**	Woods	-	-	11.2	NAT	NAT	NAT	NAT
F8576	**Blond Cedar**	Woods	-	-	54.4	MAT	MAT	MAT	MAT
F8579	**Belvedere Beech**	Woods	-	-	50.6	NAT	NAT	NAT	NAT
F8583	**Carpentry Oak**	Woods	-	-	38.6	NAT	NAT	NAT	NAT
F8585	**Evergreen Oak**	Woods	-	-	31.3	LNW	LNW	LNW	LNW
F8586	**Cetina Walnut**	Woods	-	-	27.9	MAT	MAT	MAT	MAT
F8587	**Peruca Walnut**	Woods	-	-	42.6	MAT	MAT	MAT	MAT
F8588	**Nevada Oak**	Woods	-	-	30.6	MAT	MAT	MAT	MAT
F8588	**Nevada Oak**	Woods	-	-	30.6	PGN	PGN	PGN	PGN
F8589	**Tula Oak**	Woods	-	-	12.9	PGN	PGN	PGN	PGN
F8751	**Mojave**	Colors	S 3010-Y30R	-	40.9	MAT	MAT	MAT	MAT
F8755	**Lemon**	Colors	S 1060-G60Y	-	56.3	MAT	MAT	MAT	MAT
F8793	**Green Slate**	Colors	S 6005-G20Y	7009	18.5	MAT	MAT	MAT	MAT
F8796	**Algae**	Colors	S 5040-G40Y	6025	17.4	MAT	MAT	MAT	MAT
F8820	**Leaf Green**	Colors	S 3040-G50Y	-	33.6	MAT	MAT	MAT	MAT
F8821	**Just Blue**	Colors	S 2020-R90B	-	45.2	MAT	MAT	MAT	MAT
F8822	**Denim**	Colors	S 5030-R90B	5007	16.1	MAT	MAT	MAT	MAT
F8839	**Ashen Ribbonwood**	Woods	-	-	43.0	MAT	MAT	MAT	MAT
F8841	**White Ash**	Woods	-	-	69.7	MAT	MAT	MAT	MAT
F8843	**Natural Ash**	Woods	-	-	53.3	MAT	MAT	MAT	MAT
F8844	**Aged Ash**	Woods	-	-	38.9	NAT	NAT	NAT	NAT
F8847	**Jarrah Legno**	Woods	-	-	11.5	MAT	MAT	MAT	MAT
F8848	**Blackened Legno**	Woods	-	-	8.0	NAT	NAT	NAT	NAT
F8851	**Classic Wenge**	Woods	-	-	9.4	LNW	LNW	LNW	LNW
F8853	**Rural Oak**	Woods	-	-	32.9	PGN	PGN	PGN	PGN
F8857	**Just Gold**	Colors	S 2040-Y	-	48.5	MAT	MAT	MAT	MAT
F8858	**Just Rose**	Colors	S 1010-R10B	-	65.7	MAT	MAT	MAT	MAT
F8859	**Vintage Brush**	Patterns	-	-	25.0	MAT	MAT	MAT	MAT
F8910	**Raw Birchply**	Woods	-	-	48.5	NAT	NAT	NAT	NAT
F9012	**Ebony**	Woods	-	-	9.6	NAT	NAT	NAT	NAT
F9266	**Citadel**	Colors	S 6502-Y	7039	18.6	MAT	MAT	MAT	MAT

E-mail: info@fooktsuen.com Tel：3998-3721 Fax：3998-3723
Flat I, 12/F, Block 2, Kingswin Industrial Building, 32-40 Lei Muk Road, Kwai Chung, N.T.

Radiation Protection (Lead Lined Door Serial)

Product grades, finishes and accreditations.

This Collection incorporates the following grades of decorative laminate each with its own performance characteristics.
These grades conform to EN438

Formica® Laminate

Sheets (thin) consisting of layers of wood-based fibers impregnated with thermosetting resins and a surface decor on one side
Grade: **HPL/EN 438-3 HGP:** Horizontal, General Purpose, Postforming high pressure decorative laminate
HPL/EN 438-3 HGS: Horizontal, General Purpose, Standard high pressure decorative laminate
Thickness: 0.7mm (nominal), single sided
Additional flame retardant grades are available on request (please check for available options)

Formica® Compact

Sheets (thick) consisting of layers of wood-based fibers impregnated with thermosetting resins and surface decor on one side
Grade: **HPL/EN 438-4 CGS:** Compact, General Purpose, Standard high pressure decorative laminate
Thickness: Single sided 2, 2.5, 3 mm
Additional flame retardant grades are available on request (please check for available options)

Available surface finishes and recommended applications

			Recommended applications	
Surface Finish Description	Surface Finish Designation	Code	Horizontal (& Vertical), General purpose	Vertical and Light-duty horizontal
Linewood	LNW	LW	•	
Matte 58	MAT	58	•	
Naturelle	NAT	NT		•
Puregrain	PGN	35	•	

General
The information given in this brochure is correct at the time of publication. However, as we have a policy of constant product development and improvement, product specifications may change in the future. Visit formica.com, or formica.info for technical data, as the most up-to-date source of information. Not all certifications stated are applicable or available for all Formica® products. Please check that the product you require is covered by a relevant certification or is suitable for your specific application, in advance of order placement.

Colour system notations
NCS® and RAL Classic notations represent the closest match available in the particular system. They may or may not be exact and are provided for guidance only. NCS and RAL Classic notations provided have been established from a standard matt laminate sample. Please note that different surface finishes (texture structure and gloss levels) can have an effect on colour perception. When exact colour information is required, or for cross-material matching (HPL to other materials), please always refer to an actual laminate sample in the specified finish.

Light Reflectance Value
Light Reflectance Value (LRV) is a value indicating the proportion of light reflected by a colour, when measured under standard daylight conditions. This guidance uses a scale of 0 -100, where 0 = black and therefore total light absorption, whereas white = 100 and therefore total light reflection.
The main purpose of this value is to indicate measured colour contrast between two surfaces, which need to be readily distinguishable within an environment (under static conditions, a difference of 30 units between two colours is considered adequate). LRVs stated may or may not be exact and are provided for guidance only.

Please note
For non-solid colour decors, where there are multiple colours across the design, the stated LRV is an average value taken from multiple measurements across the décor and must be used with caution. The individual colours in a pattern, woodgrain or stone design can differ more than 30 LRV units within the design itself.

bsi ISO 9001 Quality Management Systems CERTIFIED | ISO 14001 Environmental Management CERTIFIED | ISO 45001 Occupational Health and Safety Management CERTIFIED

GREENGUARD GOLD

NCS Natural Color System®
© Property of and used on licence from the Scandinavian Color institute AB, SCI-Sweden, Stockholm 2013,

ÉMISSIONS DANS L'AIR INTÉRIEUR* A+ A+ A B C

E-mail: info@fooktsuen.com Tel：3998-3721 Fax：3998-3723
Flat I, 12/F, Block 2, Kingswin Industrial Building, 32-40 Lei Muk Road, Kwai Chung, N.T.

Radiation Protection (Lead Lined Door Serial)

ENG 02/2023

The first and original
Formica Group invented high pressure laminates in 1913. Pioneers by definition, our iconic Formica® brand represents the quintessence of laminates.

Inspired by life
Laminates entered people's daily lives and made modernity dreams come true and accessible. Similarly, the demand for multifunctional, practical and durable designed surfaces is a constant inspiration for our Formica® Collections.
At rest, at leisure, at work.

Evolving with the times
The way people live, work and play continuously changes. Formica Group keep pace with these evolving times through constant innovation, reflecting global trends and responding to ever changing needs and habits.
The true original, still surfacing the world.

formica.com

E-mail: info@fooktsuen.com Tel：3998-3721 Fax：3998-3723
Flat I, 12/F, Block 2, Kingswin Industrial Building, 32-40 Lei Muk Road, Kwai Chung, N.T.

4. Lead Glass Visual Panel and Lead Sheet

Shanghai Shenwang Radiation Protective Equipment Co., Ltd. is the manufacturer of lead glass and a series of radiation protective equipment and continuously providing high-quality service to customers more than 15 years.

International Standard

Comply to the international standards of IEC 6133-1, ISO 9001:2015, ISO 14001:2015, ISO 45001:2018, GBZ/T147-2002, GB/T 19001-2016, GB/T 24001/2016, GB/T 45001-2020.

The information of major international standard is showing in the Appendix 7 &8.

Note:
The IEC-1331-1 is replaced by IEC-61331-1 as shown.

IEC-1331-1 › Complete Document History
Protective Devices Against Diagnostic Medical X-Radiation - Part 1: Determination of Attenuation Properties of Materials.

How to Order
Standards We Provide
Updating, Reporting, Audits
Copyright Compliance

Obsolete Revision Information:

REPLACED BY IEC-61331-1 - WITHDRAWN IN 2014 - May 1, 2014
1ST EDITION - Part 1: Determination of Attenuation Properties of Materials - Oct. 1, 1994

Lead Glass Data Sheet

Shanghai Shenwang Radiation Protective Equipment Co., Ltd.
上海神网辐射防护器材有限公司

DATA SHEET

ZF2 X-RADIATION PROTECTIVE LEAD GLASS

OPTICAL PROPERTIES

Refractive index Nd	1.67268
Transmission % 550mm through 5mm path	>80%

CHEMICAL PROPERTIES

Lead Oxide Content (pb)	56%
SiO2	42%

MECHANICAL PROPERTIES

Specific gravity (g/cm^3)	4.12
Chemical stability (moisture resistant)	1
Chemical stability (acid proof)	1a
Light absorption level	1-3

Shanghai Shenwang Radiation Protective Equipment Co., Ltd.
上海神网辐射防护器材有限公司

DATA SHEET

ZF6 X-RADIATION PROTECTIVE LEAD GLASS

OPTICAL PROPERTIES

Refractive index Nd	1.75523
Transmission % 550mm through 5mm path	>80%

CHEMICAL PROPERTIES

Lead Oxide Content (pb)	67%
SiO2	30%

MECHANICAL PROPERTIES

Specific gravity (g/cm^3)	4.77
Chemical stability (moisture resistant)	1
Chemical stability (acid proof)	2a
Light absorption level	1-3

上海神网辐射防护器材有限公司

福泉工程有限公司 FOOK TSUEN ENGINEERING LIMITED

Radiation Protection (Lead Lined Door Serial)

Lead Sheet Data Sheet

云南驰宏锌锗股份有限公司

Yunnan Chihong Zinc & Germanium Co.,Ltd

铅锭质量证明书

Lead Ingot Certificate Of Quality

编号: 文件编号:

NO: 2020773 Certificate No: CHQJJL 214

注册商标 Registered Trademark	驰宏锌锗牌 CHIHONG Zn&Ge	执行标准 Chinese Standard	GB/T469-2013
牌号 Code No.	Pb99.994	LME牌号 LME Sword Code	YQ99.994
发货批号 Delivery No.	Pb20-05-YQ20		
件数（锭） Ingots	675	净重（吨） Net Weight(NT)	32.5739
生产日期/批 Date of manufacture/Batch	净重（吨） Net Weight(NT)	捆数 Bundle Weight	件数（锭） Ingots
20-04-27-285	32.5739	27	675

化学成分（%）
Chemical Composition

生产批	Pb	杂质成分 不大于 Impurity no more than										
Batch No	(%)	Ag	As	Bi	Cu	Sb	Sn	Zn	Fe	Cd	Ni	总和 (Total)
20-04-27-285	99.9979	0.0002	0.0002	0.0002	0.0002	0.0003	0.0002	0.0002	0.0002	0.0002	0.0002	0.0021

外观质量	合格	尺寸	长	615±10	宽	120±10	厚	80±10
Presentation Quality	Qualified	Size	Length	615±10	Width	120±10	Thick	80±10

检验: 曾红梅 审核: 余孝琪 批准: 陈吉祥

Inspector: Checker: Approver:

产地: 中国·云南·曲靖

Place of origin: China · Yunnan · Qujing

厂址: 云南省曲靖经济技术开发区

Add: The Economic & Technological Development Zone,Qujing City, Yunnan Provinc, P.R.China

主页(Home Page): http://www.chxz.com 电子信箱(Email): chyxc@chxz.com

邮编(Zip code): 655000 电话(Tel): 0874-8966715 8966716 传真(Fax): 0874-8966718

Radiation Protection (Lead Lined Door Serial)

Certificate

TÜVRheinland

CE Technical Documentation Review Report

Manufacturer:	**Shanghai Shenwang Radiation Protective Equipment Co., Ltd.** No.149, Lane 1510, Jidi Road, Huacao Town Minhang District, Shanghai, PRC
Report Number:	15097024 001
Examination intent:	Examination the completeness of the Technical Documentation according to the requirements of the Medical Devices Directive 93/42/EEC Annex VII
Product(s):	Radiation Shielding Material for medical use: Lead Sheets Leaded Glass Leaded Goggles Lead Aprons
Type(s)/Model(s):	Lead Sheets: custom-made sizes Leaded Glass: ZF2, ZF3, ZF6, ZF7 Leaded Goggles for eye radiation shield Lead Aprons: S M L
Classification:	Class I, rule 1 (according to manufacturer's declaration)
Review result:	During the examination of the provided Technical Documentation (No.: SW/TF-001, Rev A/0, 2016-05-29), no Non-compliance according to the requirements of the Medical Devices Directive 93/42/EEC Annex VII was detected.

TÜV Rheinland (Shanghai) Co., Ltd.

Shanghai, 2016-08-24

Daniel ZHU
Lead Auditor, Product Assessor
Medical Device Services

Products · Quality Assurance TÜVRheinland Approved

Rev. 05, 2013-12-17

TÜV Rheinland (Shanghai) Co., Ltd.
Unternehmensgruppe
TÜV Rheinland Group

TÜV Building, No.177, Lane 777, West Guangzhong Road, Zhabei District, Shanghai 200072, P.R.China

Tel: (86/21) 6108 1188
Fax: (86/21) 6108 1199

e-mail: service-gc@tuv.com
Internet: http://www.tuv.com

Centre for Radiation, Chemical and Environmental Hazards

Health Protection Agency

Radiation Metrology Group, Radiation Protection Division
Health Protection Agency, Chilton, Didcot, Oxfordshire, OX11 0RQ
E-mail: rad.met@hpa.org.uk Web: www.hpa.org.uk/radiation
Tel: +44(0)1235 831 600 Fax: +44(0)1235 822 818

Radiological Protection Instrument
Certificate of Calibration
No. 49096

A. Name and address of user:

Corning SAS
Rue Saint Laurent BP90094 Bagneaux sur Loing
77792 Nemours CEDEX

B. Conditions:

Distance from tube target to sample:	50cm
Distance from tube target to detector:	150cm
Ionisation chamber used:	Exradin A6
Electrometer used:	Ionex Dosemaster 2590B
X-ray potential:	60kV, 80kV, 100kV, 110kV, 150kV, 200kV, 250kV and 300kV
Total beam filtration:	Equivalent to 0.25mm Cu at 100 kV And 0.7mm Cu at 150 kV
Samples:	Lead glass thickness of 3.5mm, 5.0mm, 5.5mm, 7mm, 8mm, 8.5mm, 9mm, 10mm, 11mm, 12mm, 13mm, 14mm, 14.5mm, 16mm, 18mm and 25mm.

C. Traceability:

All the equipment associated with the measurements performed in this report has calibrations directly traceable to National Standards via the National Physical Laboratory or UKAS Accredited calibration facilities. All tests have been carried out in accordance with IEC 61331-1:2002 Protective devices against diagnostic medical X-radiation. Determination of attenuation properties of materials, BS EN 61331-2:2002 Protective devices against diagnostic medical X-radiation. Protective glass plates and BS 4031:1996 Specification for X-ray protective lead glasses. In addition the method used is in accordance with JIS Z 4501: Testing method of Lead Equivalent for X – ray protective Devices:1998 and the results obtained satisfy (as far as the radiological tests are concerned) JIS R 3701:Lead glass for X-ray protection:1990.

D. Uncertainties:

The uncertainties stated in this certificate are expressed at the 95% confidence level.

Name of persons performing the test:	Mrs J C McClure
Signature of qualified person:	Mr D R McClure
Date:	12th May 2008

福泉工程有限公司 FOOK TSUEN ENGINEERING LIMITED

Certificate of calibration No. 49096

E. Results:

The estimated uncertainties in these values are ±3% (based on combined errors) quoted at the 95% confidence limit.

The samples Lead equivalence was derived using a four point La Grange Interpolation routine applied to data obtained from known thicknesses of Lead and from each sample.

Sample	Lead Equivalent (mm) at X-ray tube potentials							
	300 kV	250 kV	200 kV	150 kV	110 kV	100 kV	80 kV	60 kV
3.5mm Glass	1.00	0.99	1.01	1.14	1.21	1.25	1.24	1.18
5.0mm Glass	1.30	1.29	1.32	1.51	1.68	1.68	1.68	1.67
5.5mm Glass	1.33	1.32	1.35	1.52	1.71	1.71	1.71	1.85
7.0mm Glass	1.76	1.74	1.76	2.03	2.28	2.25	2.26	2.89
8.0mm Glass	2.09	2.07	2.06	2.42	2.71	2.68	2.69	N/A
8.5mm Glass	2.14	2.11	2.12	2.58	2.84	2.77	2.80	N/A
9.0mm Glass	2.33	2.35	2.27	2.88	2.96	2.94	2.95	N/A
10.0mm Glass	2.62	2.57	2.54	2.98	3.34	3.32	3.33	N/A
11.0mm Glass	2.80	2.71	2.69	3.24	3.59	3.54	N/A	N/A
12.0mm Glass	3.26	3.08	3.03	3.61	4.00	4.02	N/A	N/A
13.0mm Glass	3.28	3.20	3.13	3.73	4.14	4.18	N/A	N/A
14.0mm Glass	4.05	3.55	3.51	4.21	4.66	4.44	N/A	N/A
14.5mm Glass	4.22	3.69	3.61	4.30	4.71	N/A	N/A	N/A
16mm Glass	4.34	4.11	4.03	4.81	N/A	N/A	N/A	N/A
18mm Glass	4.66	4.52	4.42	5.38	N/A	N/A	N/A	N/A
25mm Glass	6.51	6.30	6.12	N/A	N/A	N/A	N/A	N/A

N/A = Not applicable. X-ray transmission below level of detection.

福泉工程有限公司
FOOK TSUEN ENGINEERING LIMITED

E-mail: info@fooktsuen.com Tel：3998-3721 Fax：3998-3723
Flat I, 12/F, Block 2, Kingswin Industrial Building, 32-40 Lei Muk Road, Kwai Chung, N.T.

Certificate of calibration No. 49096

The minimum Lead equivalent thickness was determined for a range of glass thicknesses; this was determined by performing linear regression on the above data.
The estimated uncertainties in these values are ±3% (based on combined errors) quoted at the 95% confidence limit, with the exception of the equivalence's quoted at 60 kV which have an associated uncertainty of ±10% due to the fact that only two points were available for the calculation.

Thickness range (mm)	Minimum Lead Equivalent (mm) at X-ray tube potentials							
	300 kV	250 kV	200 kV	150 kV	110 kV	100 kV	80 kV	60 kV
3.5 – 5.0	1.00	0.99	1.01	1.14	1.21	1.25	1.24	1.18
5.0 – 6.5	1.30	1.29	1.32	1.51	1.68	1.68	1.68	1.67
7.0 – 8.5	1.76	1.74	1.76	2.03	2.28	2.25	2.26	2.89
8.5 – 10.0	2.14	2.11	2.12	2.58	2.84	2.77	2.80	N/A
10.0 – 12.0	2.62	2.57	2.54	2.98	3.34	3.32	3.33	N/A
11.0 – 13.0	2.80	2.71	2.69	3.24	3.59	3.54	N/A	N/A
14.0 – 16.0	4.05	3.55	3.51	4.21	4.66	4.44	N/A	N/A
16.0 – 18.0	4.34	4.11	4.03	4.81	N/A	N/A	N/A	N/A
18.0 – 25.0	4.66	4.52	4.42	5.38	N/A	N/A	N/A	N/A
Greater than 25.0	6.51	6.30	6.12	N/A	N/A	N/A	N/A	N/A

N/A = Not applicable. X-ray transmission below level of detection.

E-mail: info@fooktsuen.com Tel：3998-3721 Fax：3998-3723
Flat I, 12/F, Block 2, Kingswin Industrial Building, 32-40 Lei Muk Road, Kwai Chung, N.T.

Radiation Protection (Lead Lined Door Serial)

QUALITY MANAGEMENT SYSTEM CERTIFICATE

Registration No. 0350120Q31042R0S

This is to certify that the quality management system of

Shanghai Shenwang Radiation Protective Equipment Co., Ltd.

Nanmei Lane, Weixing Village, Huacao Town, Minhang District, 201107

Social Credit Code: 913101127472906754

is in conformity with

GB/T 19001-2016 / ISO 9001:2015 Standard

This certificate is valid to the following product(s)

Manufacture and service of lead glass products (Site Covered: No. 18, Zexin Avenue, Xingou Town, Funing County, Yancheng City, Jiangsu Province/Room B, 2/F, Building 4, Lane 88, Minbei Road, Minhang District, Shanghai).

Date of issue: November 13, 2020
Date of expiry at most: November 12, 2023

Representative: WangHonglin

XINGYUAN CERTIFICATION CENTRE CO., LTD. (XQCC)
(7FL, Tower C, Jiahua Plaza, No. 9 Shangdi 3 St., Haidian, Beijing)

中国认可
国际互认
管理体系
MANAGEMENT SYSTEM
CNAS C035-M

NOTE: This certificate shall be maintained by regular surveillance audit.
The validity of the certificate can be verified by scanning QR code.
The information of the certificate can be available in http://www.cnca.gov.cn, the website of CNCA, and in our website http://www.xqcc.com.cn.

Radiation Protection (Lead Lined Door Serial)

ENVIRONMENTAL MANAGEMENT SYSTEM CERTIFICATE

Registration No. 0350120E20626R0S

This is to certify that the environmental management system of

Shanghai Shenwang Radiation Protective Equipment Co., Ltd.

Nanmei Lane, Weixing Village, Huacao Town, Minhang District, 201107

Social Credit Code: 913101127472906754

is in conformity with

GB/T 24001-2016 / ISO 14001:2015 Standard

This certificate is valid to

Manufacture and service of lead glass products (Site Covered: No. 18, Zexin Avenue, Xingou Town, Funing County, Yancheng City, Jiangsu Province/Room B, 2/F, Building 4, Lane 88, Minbei Road, Minhang District, Shanghai).

Date of issue: November 13, 2020
Date of expiry at most: November 12, 2023

Representative: *WangHonglin*

XINGYUAN CERTIFICATION CENTRE CO., LTD. (XQCC)
(7FL, Tower C, Jiahua Plaza, No. 9 Shangdi 3 St., Haidian, Beijing)

中国认可
国际互认
管理体系
MANAGEMENT SYSTEM
CNAS C035-M

NOTE: This certificate shall be maintained by regular surveillance audit.
The validity of the certificate can be verified by scanning QR code.
The information of the certificate can be available in http://www.cnca.gov.cn, the website of CNCA, and in our website http://www.xqcc.com.cn.

Radiation Protection (Lead Lined Door Serial)

ENVIRONMENTAL MANAGEMENT SYSTEM CERTIFICATE

Registration No. 0350120E20626R0S

This is to certify that the environmental management system of

Shanghai Shenwang Radiation Protective Equipment Co., Ltd.

Nanmei Lane, Weixing Village, Huacao Town, Minhang District, 201107

Social Credit Code: 913101127472906754

is in conformity with

GB/T 24001-2016 / ISO 14001:2015 Standard

This certificate is valid to

Manufacture and service of lead glass products (Site Covered: No. 18, Zexin Avenue, Xingou Town, Funing County, Yancheng City, Jiangsu Province/Room B, 2/F, Building 4, Lane 88, Minbei Road, Minhang District, Shanghai).

Date of issue: November 13, 2020
Date of expiry at most: November 12, 2023

Representative: *WangHonglin*

XINGYUAN CERTIFICATION CENTRE CO., LTD. (XQCC)
(7FL, Tower C, Jiahua Plaza, No. 9 Shangdi 3 St., Haidian, Beijing)

中国认可
国际互认
管理体系
MANAGEMENT SYSTEM
CNAS C035-M

NOTE: This certificate shall be maintained by regular surveillance audit.
The validity of the certificate can be verified by scanning QR code.
The information of the certificate can be available in http://www.cnca.gov.cn, the website of CNCA, and in our website http://www.xqcc.com.cn.

5. Appendix (Job Reference)

E-mail: info@fooktsuen.com Tel：3998-3721 Fax：3998-3723
Flat I, 12/F, Block 2, Kingswin Industrial Building, 32-40 Lei Muk Road, Kwai Chung, N.T.

Radiation Protection (Lead Lined Door Serial)

Hong Kong Main Job Reference	
1	Hong Kong Children's Hospital (Kai Tak)
2	Housing Authority (Shek Kip Mei Estate), Dental Clinic
3	Castle Peak Hospital Dental Clinic
4	Museum Plus (M+) – X-ray Room
5	SPCA (Animal Welfare Centre – Tsing Yi)
6	Kwong Wah Hospital Redevelopment Phase 1

上海神网辐射防护器材有限公司
神网 Shanghai Radiation Protective Equipment Co., Ltd.

上海华东医院	拍片机房
上海东方医院	拍片机房
上海曙光医院	拍片机房
江苏泰州出入境检验检疫局	透视机房
上海市静安区中心医院	拍片机房
上海市第六人民医院	CT，DR 机房
上海第二军医大学附属长海医院	CT，DR 机房
上海市闵行区中心医院	拍片机房
上海市医科大学附属金山医院	拍片机房
上海奉贤海湾精神卫生中心	拍片机房
上海儿童医学中心	CT、胃肠机房
上海圣欣儿科门诊部	DR 机房

福泉工程有限公司 FOOK TSUEN ENGINEERING LIMITED

Radiation Protection (Lead Lined Door Serial)

上海神网辐射防护器材有限公司
Shanghai Radiation Protective Equipment Co., Ltd.

Job Reference	
医院名称	工程项目名称
上海阳光康复中心	拍片机房
香港儿童医院	拍片机房
虹口区精神卫生中心	X 线机房
昆山市第四人民医院	X 线机房
上海市浦东新区疾病预防控制中心	透视机房
南京 94654 部队医院	透视，拍片机房
上海奉贤区海湾医院	透视，拍片机房
浙江省杭州消防医院	拍片机房
浙江省杭州拱墅区医院	拍片机房
上海光华医院	拍片机房
上海静安区疾控中心	透视机房
江苏海宁瑞金医院	拍片机房
闵行区精神卫生中心	X 线机房
上海复旦大学附属儿科医院	CT，DR，ECT 机房，拍片机
上海静安区闸北中心医院	DR、CT、钼靶机房、口腔 CT
上海江川医院	透视，拍片机房
上海奉贤中心医院	CT，DR 机房
上海新华医院	CT，DR，震波机房
医院名称	工程项目名称
公安部第三研究所	辐射防护检测机房
长征医院	CT，DR，拍片，胃肠机房
虹口区精神卫生中心	DR 机房
徐汇区妇幼保健院	X 光拍片机房
昆山虹桥医院	X 光拍片机房
黄浦区中西医结合医院	DR 机房
上海市中山医院放射科	拍片机房，不锈钢电动移门

----- THE END ----